BRANSON/IPC
A SMITHKLINE BECKMAN COMPANY

BRANSON
a Smithkline company

BRANSON/IPC
a SmithKline company

BRANSON INTERNATIONAL PLASMA CORPORATION

USER'S MANUAL

FOR THE

BRANSON/IPC S2000 SERIES
PLASMA SYSTEM

Part I

Part No. A10488 Rev. A

5/26/83

31172 Huntwood Avenue
P.O. Box 4136 Hayward, CA 94544
(415) 489-3030 Telex 337-759

1.0 INTRODUCTION

1.1 Description

The IPC S2000 Series Plasma System generates a low pressure, low temperature gaseous plasma. The machine comprises a source of electrical power; means for coupling this power into the plasma treatment chamber(s); and a system to control the flow of reactant plasma gases.

The system is a fully automatic processing machine which has three modes of operation: Automatic, Semi-automatic and Manual.

All flow controls and power controls are electrically operated through switches and relays..

2.0 EQUIPMENT SUPPLIED

2.1 Listing:

The equipment supplied comprises one each of the following:

R. F. GENERATOR

PROCESS CONTROLLER

REACTOR CENTER

VACUUM PUMP (Optional)

2.2 Unpacking:

All parts and components should be carefully removed from their shipping containers and examined for possible damage during shipment. Any damage should be reported immediately to your carrier.

Inspect the glass components for possible shipping damage.

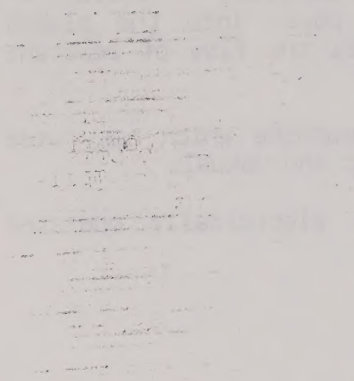

2.3 Equipment Supplied:

The following equipment is supplied to:

_____

Under P. O. Number_____

Model Number: IPC_____, comprising:

PM_____R. F. Generator (Serial No._____)

PM_____Reactor Center (Serial No._____)

PM_____Controller (Serial No._____)

Cables as follows:

_____P/N 1163-001 _____Plug P/N 04340

_____P/N 2349-005 _____Cap. P/N 5970-0026

_____P/N 2351-001

_____P/N 10483

_____P/N 2973-002 (Temp Option)

_____P/N 6548-001

_____P/N 03579 (Capacitance Manometer Option)

Instruction Manual P/N_____

Vacuum Pump (Serial No._____

3.0 INSTALLATION

3.1 General Instructions:

After the IPC S2000 Series System and components have been removed from their packages the machine is ready for set up. Gas lines and electrical cables may be connected.

The meters have been shorted to prevent electrical damage during shipment. BE SURE TO REMOVE SHORTING WIRES BEFORE SYSTEM OPERATION.

3.2 Vacuum Pump Installation:

The vacuum pump is supplied with its own isntallation instructions. These should be referred to for installation of pump, oil and attachment of power cord.

The exhaust manifold extension protrudes from the hole in the rear of the Reactor Center chassis. The flexible hose provided is coupled directly from the exhaust manifold extension to the nipple supplied with the vacuum forepump.

4.0 INITIAL OPERATION AND CHECKOUT

4.1 Front Panel Controls:

(1) READOUT CLOCK:	Reads out time to a 10th of a minute. Maximum readout is 99.9 minutes.
(2) THUMBWHEEL SWITCH: (3)	Pre-selects process time for each program. Maximum time is 99.9 minutes.
(3) AC ON/OFF SWITCH:	Turns on and off AC power to system.
(4) VACUUM SWITCH & INDICATOR:	When indicator light is "ON" vacuum solenoid is open, allowing vacuum to be drawn.
(5) PURGE SWITCH & INDICATOR:	When light is "ON" purge solenoid is open to the atmosphere.
(6) MANUAL/AUTO MODE SWITCH	In AUTO position the system can be operated in automatic or semi-automatic mode.
(7) (a) FLOW SWITCH, (b) INDICATOR & (c) FLOW ADJUST VALVE:	(Three Programs) When light is "ON", flow solenoid for that program is open. Flow can be adjusted with needle valve.

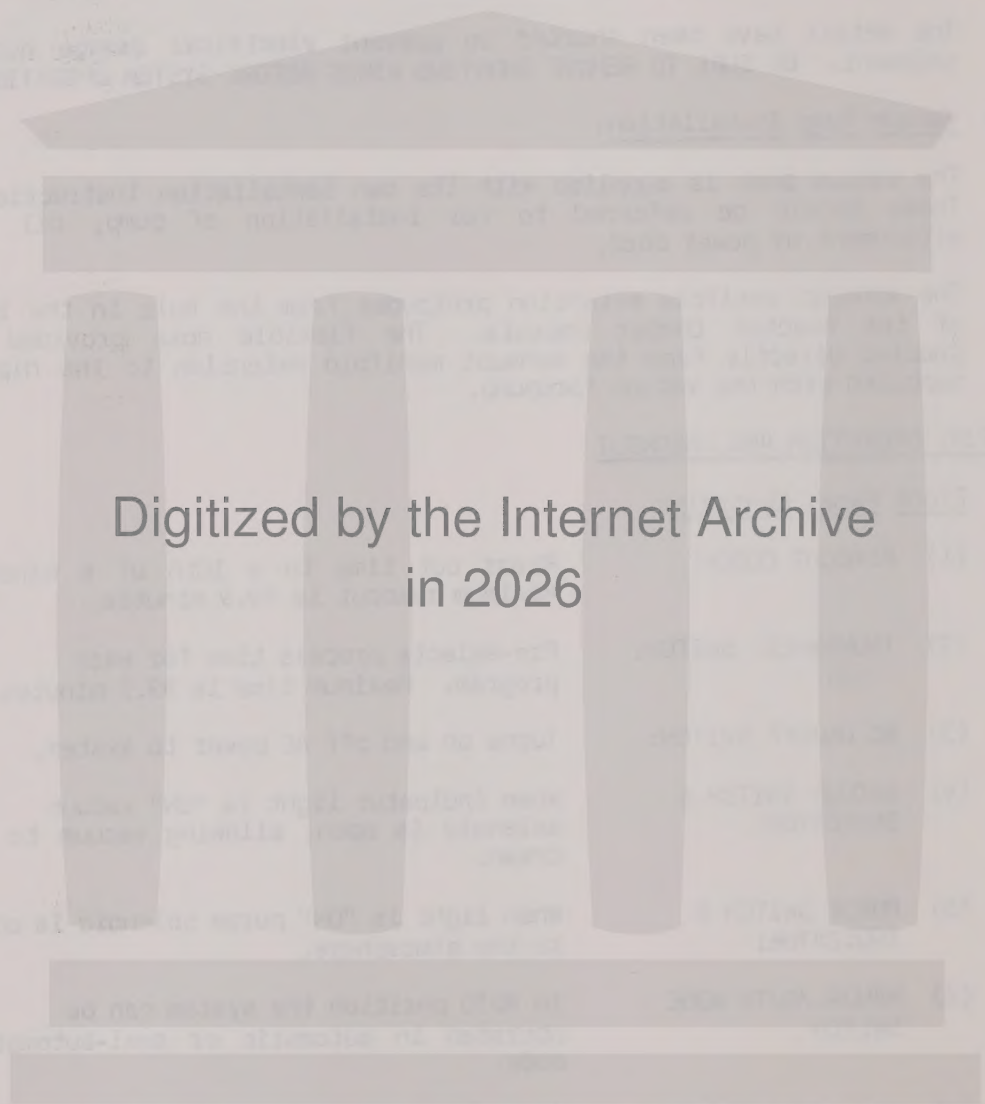

Digitized by the Internet Archive
in 2026

https://archive.org/details/manualsplus_13536

(8) (a) POWER SWITCH,
(b) INDICATOR &
(c) POWER ADJUST CONTROL:

When the light is "ON" the power level can be adjusted by means of the power knob and observing the wattmeter.

(9) FORWARD/REFLECTED POWER SWITCH:

With switch in FORWARD postion the forward power can be monitored on the upper scale of the wattmeter. With switch in REFL. position reflected power can be monitored on lower scale.

(10) TORRMETER:

This indicates vacuum in torr (mm of mercury).

(11) POWER METER:

Indicates power in watts.

(12) RESET LIGHT:

Indicates end of sequence automatic mode.

(13) START PUSHBUTTON:

Starts sequence for automatic mode, i.e., the three pumpdowns, the three programs and the end of process alarm and light (over reset pushbutton).

(14) CYCLE PUSHBUTTON:

Every consecutive push of this pushbutton steps the processor to the next state.

The clock will not start at this time but can be started by selecting the desired program with the cycle switch and pushing the start switch to start the clock.

The processor is then in automatic mode.

(15) RESET PUSHBUTTON:

This resets the clock to 000 and the program control. The vacuum solenoid is closed and the purge valve is opened. Samples can be placed into or removed from the reactors.

(16) TIME/BYPASS/TEMP SWITCH (Program 1): This three position toggle switch determines the method of controlling the period of Program 1.

In the center position (BYPASS) the programmer steps through Program 1 (eliminating the need for setting the thumbwheel switches to zero).

In the TIME position the period of Program 1 is determined by the setting of Program 1 thumbwheel switches.

In the TEMP position the period of Program 1 is determined by the Temperature Controller. The Temperature Controller module is optional. If the system does not include a Temperature Controller, the programmer will bypass Program 1 when the switch is in the TEMP position.

(17) TIME/BYPASS SWITCH (Program 2): This position toggle switch causes the programmer to step through Program 2 in the BYPASS position. In the TIME position the period of Program 2 is determined by the setting of the Program 2 thumbwheel switches.

(18) TIME/BYPASS/DET SWITCH (Program 3): This three position toggle switch determines the method of controlling the period of Program 3.

In the BYPASS position the programmer steps through Program 3.

In the TIME position the period of Program 3 is determined by the setting of the Program 3 thumbwheel switches.

In the DET position the period of Program 3 is determined by the optional DPS 2300 END OF PROCESS DETECTOR. If no DPS 2300 is provided with the system, the programmer will bypass Program 3 when the switch is in the DET position.

NOTE: START, CYCLE AND RESET PUSHBUTTONS are used only in automatic and semi-automatic modes of operation. They do not function in the manual mode.

4.2 Installing the Gas Lines:

Several options are available for installing the reactant gases. The S2000 Series System may be set up to run one gas at three different RF power levels and flows; alternately the machine may be set up to run a different gas in each channel.

Connect the gas(es) to the desired Program with 1/4" plastic or metal tubing. Swagelock connectors for the gas lines are found on the back panel of the Control Module. There are four such connections on the back panel: one for each Program and one for a purging gas (if desired). Insure that all connections are tight. NOTE: Input gas pressure should not exceed 5 PSIG.

The torrmeter may be calibrated for other gases by using the appropriate conversion factors (refer to figure 1). In general, the plasma process, such as etching SnO_2 and removal from KFMR photoresist, require specific pressures. However, flowrators are provided with the system for monitoring flows.

!CAUTION!

THIS EQUIPMENT HAS BEEN DESIGNED FOR USE WITH THE FOLLOWING GASES:

ARGON	HELIUM
NITROGEN	AIR
OXYGEN	CF_4/O_2

USE OF ANY GASES OTHER THAN THOSE LISTED ABOVE MAY BE HAZARDOUS. DO NOT USE OTHER PROCESS GASES WITHOUT PRIOR WRITTEN APPROVAL OF BRANSON/IPC, 31172 HUNTWOOD AVENUE, HAYWARD, CALIFORNIA 94544.

4.3 Initial Operation:

After making initial electrical connection, insure the following:

ON/OFF switch on the generator is OFF.

AC ON/OFF switch on the Process Programmer is OFF.

ON/BYPASS switch in UP position.

The Vacuum switch is in AUTO (down) position.

The Purge switch is in AUTO (down) position.

The MANUAL/AUTO switch is in MANUAL position.

4.3 (continued)

Initial switch position before external AC electrial power is applied: RF GENERATOR ON/OFF SWITCH IS OFF!!

Flow adjust switches on Program 1, 2, and 3 will be in AUTO (down) position.

!CAUTION!
DO NOT ATTEMPT TO TURN OFF THE GAS FLOW COMPLETELY WITH THE FLOW ADJUST NEEDLE VALVES (OFF CLOCKWISE), AS FORCING THE NEEDLE AGAINST THE SEAT MAY PERMANENTLY DAMAGE THE VALVE.

RF power control knobs will be completely counter-clockwise.

RF switches in AUTO (down) position.

FORWARD/REFLECTED switch will be in FORWARD position.

AC power is now ready to be applied:

(1) Plug the AC cable on the RF generator to a nominal 115V or 220V power source as specified in generator manual.

(2) Turn the AC power switch on the generator to the ON position. The AC indicator will illuminate. After a delay of about three minutes the READY lamp will light signifying generator is ready to supply RF power.

(3) Turn AC ON/OFF switch on the Process Controller to ON. The AC power indicator should light and the LED display indicate 000.

4.4 Initiating a Plasma:*

Before attempting to initiate a plasma be sure that the READY light on the front panel of the generator is ON, all cooling fans are operating and that the vacuum pump is turned ON. Program 1 flow and RF controls may be used to initiate the first plasma.

(1) Raise the Purge switch. The Purge indicator should light and the pressure in the Reactors comes to atmosphere. This is indicated on the torrmeter on the Process Controller.

4.4 (continued)

(2) If the Reactor door(s) are already open, close them now. They should both open and close easily at the atmospheric pressure attained in the Purge state.

(3) Lower the Purge switch to AUTO and raise the Vacuum switch. The Reactor door(s) should pull tightly against the Reactor front surface and the system pressure commence to drop. After less than a minute of pumping the pressure on the torrmeter should be less than 0.5 torr. When the system is first pumped down this time may be lengthened by absorbed water on the Reactor walls.

It may be noted that the torrmeter indicates less than zero on the meter. This is of no consequence since readings at this low pressure are unreliable. The gauge has been calibrated to read correctly over the pressure range 0.5 - 5.0 torr and the zero point has been allowed to fall where it may.

(4) Raise the RF power switch for Program 1.

!CAUTION!
DO NOT TURN ON R. F. POWER UNTIL CHAMBER PRESSURE GOES BELOW 5 TORR OR SERIOUS DAMAGE TO THE SYSTEM MAY RESULT.

(5) Raise the RF level control for Program 1 in the clockwise direction.. At this low pressure in he Reactor a plasma should initiate at very low power. Turn the RF control to about mid-position.

(6) Raise the flow switch for Program 1.

(7) Open the flow adjust valve for Program 1 until the torrmeter indicates a pressure rise. Set the flow to the desired operating pressure with O_2.

(8) It should be possible to set the RF power control knob fully clockwise and raise the flow until the torrmeter indicates a pressure of 4.0 - 5.0 torr. It may be noted that lowering the RF power control will reduce the forward power, but the reflected power will rise at the same time until eventually they become equal and the plasma extinguishes.

If raising the power control does not re-initiate the plasma, turn off the flow switch until the pressure drops to a point where the plasma does initiate. The switch may then be turned on again to bring the flow back to its original value.

4.4 (continued)

(9) The IPC S2000 Series System has an impedance matching network which has been designed to operate over a wide range of pressures (0.5 - 5.0 torr) and power levels from 0 to maximum. This system includes an Automatch and these functions are fully automatic without operator intervention.

5.0 MODES OF OPERATION

5.1 Manual Operation:

In manual operation all flow solenoids and power controls are turned on or off by means of a switch. Position vacuum switch to the MANUAL (Up) position and Purge switch to the AUTO (down) position, and the MANUAL/AUTO switch to MANUAL. This will allow a vacuum to be drawn.

5.2 Semi-Automatic Operation:

(1) AC power off.

(2) Vacuum switch in AUTO (down) position.

(3) Purge switch in AUTO (down) position.

(4) Manual/Auto switch in MANUAL (up) position.

(5) All flow and RF power switches will be in AUTO (down) position.

(6) All Program Bypass switches in the up position.

(7) All power controls will be counter-clockwise.

(8) Turn AC On/Off switch to ON.

(9) The AC power indicator light should light and the indicator should read 000.

(10) Manual/Auto switch to AUTO. Purge indicator should light, and the system pressure should rise to atmosphere.

(11) Depress the Cycle button. At this time the Purge light should go out and the Vacuum light should be illuminated. This allows a vacuum to be drawn.

(12) When the Torrmeter is less than 0.1 torr, depress the Cycle button again and the RF and Flow indicator lights for Program 1 should be illuminated.

Each time the Cycle switch is depressed the system switches to pumpdown cycle and, on the next depression, to the following cycle.

After Program 3 light has been illuminated the next push of the Cycle button will turn on the audible signal and the END OF PROCESS light above Reset button should illuminate.

(13) Push the Reset button to turn off the audible signal and the Reactor(s) will purge to atmosphere.

Run through this procedure a few times to be sure the operation is repeatable. This procedure has shown us that the semi-automatic mode is working properly.

5.3 Automatic Operation:

(1) AC/On/Off Switch on Process Programmer is OFF.

(2) Vacuum, Purge, and Power switches are in AUTO position.

(3) Manual/Auto switch is in MANUAL (Up) position.

(4) RF Power controls are in complete counter-clockwise position.

NOTE: To start the automatic operation the program thumbwheels will be pre-adjusted to a specific time. The time is adjustable to 1/10 of a minute, i.e., a time of 00.1 to 99.9 minutes can be programmed.

(5) Turn the AC On/Off switch on the Process Programmer to ON.

(6) The AC Power indicator light should illuminate and the clock read 000.

(7) Turn the Manual/Auto switch to AUTO (down) position.

(8) Depress START button. At this time the vacuum indicator light shoiuld illuminate and the readout should start counting.

5.3.1 Program 1:

At the end of the pumpdown the clock will reset to "0", Program 1 will start and its RF and Flow lamps will illuminate.

5.3.2. Pumpdown:

As soon as the preset time of Program 1 is reached the process will end and the system will go into the second pumpdown cycle to remove the gas remaining in the Reactor Chamber(s).

5.3.3 Program 2:

After the second pumpdown the system will step to Program 2, resetting the clock to 000 and going up to the time preset for Program 2.

5.3.4 Pumpdown:

The system pumps down again after Program 2 is finished.

5.3.5 Program 3:

After the third pumpdown Program 3 commences and continues until the end of time preset for Program 3.

5.3.6 Audible signal will sound to indicate end of process and the End-Of-Process indicator will illuminate.

5.3.7 Depress Reset button to purge the Reactor(s) back to atmosphere.

5.4 Pre-Programming the System for Automatic operation:

(1) Be sure that all vacuum lines and electrical cables are connected properly.

(2) R. F. Generator power OFF.

(3) Process Programmer AC Power Off.

(4) Manual/Auto switch on MANUAL.

(5) Vacuum switch will be in MANUAL position.

(6) Purge switch will be in AUTO position.

(7) Turn AC Power on R. F. Generator ON.

(8) AC Power on Process Programmer ON.

At this time pumpdown should begin. When Torrmeter reads 0.1 torr or less, programs may be pre-set.

5.5 Pre-setting Each Program:

(1) Turn desired Flow switch to MANUAL (Up) position.

(2) Observing the Torrmeter, adjust flow to the desired amount, using flow adjust valve for that Program.

(3) Turn off Flow switch and let the pressure drop below 0.1 Torr.

(4) With the Forward/Reflected switch in a FORWARD position turn the RF Power switch for the desired Program to the MANUAL (Up) position and slowly turn the power knob in a clockwise position to the desired power level.

A plasma discharge should be observed at this time in the Reactor Chamber. After the plasma is initiated turn the Flow switch back on. Set the power to the desired level.

(5) Turn Forward/Reflected switch to REFLECTED and be sure that the reflected power is less than 15 watts.

(6) Turn OFF Program Flow and RF Power switches.

This procedure has adjusted the RF Power and Flow to a pre-determined level. Other programs are adjusted in the same manner, adjusting the Flow first, and then adjusting the RF Power control.

Flow and RF Power are now programmed; only the time on the thumbwheels needs to be set to each desired process time.

If at any time it is desired to eliminate one or two of the Programs, move the corresponding Program Bypass switch to the bypass position.

5.6 Final Check Before Automatic Operation:

Before going to a completely automatic mode of operation a semi-automatic check of power and flow can be made easily.

5.6.1 This is done by placing the Vacuum and Purge switch on the Process Programmer in an AUTO (down) position and the Manual/Auto switch to the AUTO (down) position.

5.6.2 Be sure that all of the Flow and RF switches on the Control Module are in the AUTO position and the Forward/Reflected power is in the FORWARD position.

5.6.3 Push the Reset button on the Process Programmer. Only the Purge light should be illuminated at this time. Depress the Cycle switch once and the Purge light should go out and the Vacuum light should illuminate.

5.6.4 At the same time the Vacuum meter should be observed and go down to less than 0.1 torr. As soon as this vacuum is achieved, depress the Cycle switch again. At this time Program 1 RF and Flow lights should illuminate. Observe the torrmeter and wattmeter to insure that the initial Program is correct. A plasma discharge will be observed.

5.6.5 Depress the Cycle switch. The RF and Flow lights of Program 1 should go out and the System pump down.

5.6.6 When the pressure is below 0.1 torr press the Cycle switch. Program 2 lights should come on. Preset pressure and power should be observed.

5.6.7 Depress the Cycle switch. The RF and Flow lights for Program 2 should go out and the System should pump down.

5.6.8 When the pressure is below 0.1 torr press the Cycle switch. Program 3 lights should come on. Preset pressure and power should be observed.

5.6.9 Depress Reset button. The Vacuum light should go out and the Purge light should again come on. The Processor is now ready for completely automatic processing.

6.0 PROCESS CONTROLLER - THEORY OF OPERATION

6.1 The sequencing of the S2000 System automatically through the steps described above is controlled by the Process Controller. For each of explanation we shall refer to the various phases of the process as States. There are eight as follows:

0 Pumpdown preceding Program 1.
1 Program 1.
2 Pumpdown preceding Program 2.
3 Program 2.
4 Pumpdown preceding Program 3.
5 Program 3.
6 End of Process. Audible and visual signal.
7 Purge.

For a functional description of the Programmer refer to the block diagram of Figure 1. The system is digital and is comprised of TTL integrated circuits. As mentioned previously, the system proceeds through its steps at intervals of 0.1 second. The 10/sec. signal required is produced by the CLOCK GENERATOR, which also generates the basic system clock of 60 Hz. The display of the elapsed time for each phase is the function of the COUNTER AND DISPLAY. It also produced signals at intervals of 1 minute (1/min) and .10 minutes (.1/min).

The time period for each of the states of the programmer is determined by:

a) Setting of the front panel thumbwheel switches for each of the three programs.
b) Internally wired options for each of the pumpdown periods.

The ten position thumbwheel switches and the busses interconnecting them are indicated by the MATRIX shown in the block diagram (Fig. 1.) The Programmer then functions by virtue of three sequencers or scanners.

The PROGRAM SEQUENCER provides the eight process states itemized above with an output for each state. Each of these outputs effects the operation of the appropriate gas valves and relays comprising the TRIACS and LIGHTS. The PROGRAM SEQUENCER increments in order from one state to the next under control of the second of the sequencers, the COMMUTATOR.

The COMMUTATOR scans in a fixed order the positions of the twelve "switches" (hard wire and thumbwheel) comprising the MATRIX. The ADDRESS GENERATOR controls the scanning sequence of the COMMUTATOR. The period of time that the COMMUTATOR dwells on each of its twelve inputs is determined by the setting of each switch and the DIGIT SEQUENCER.

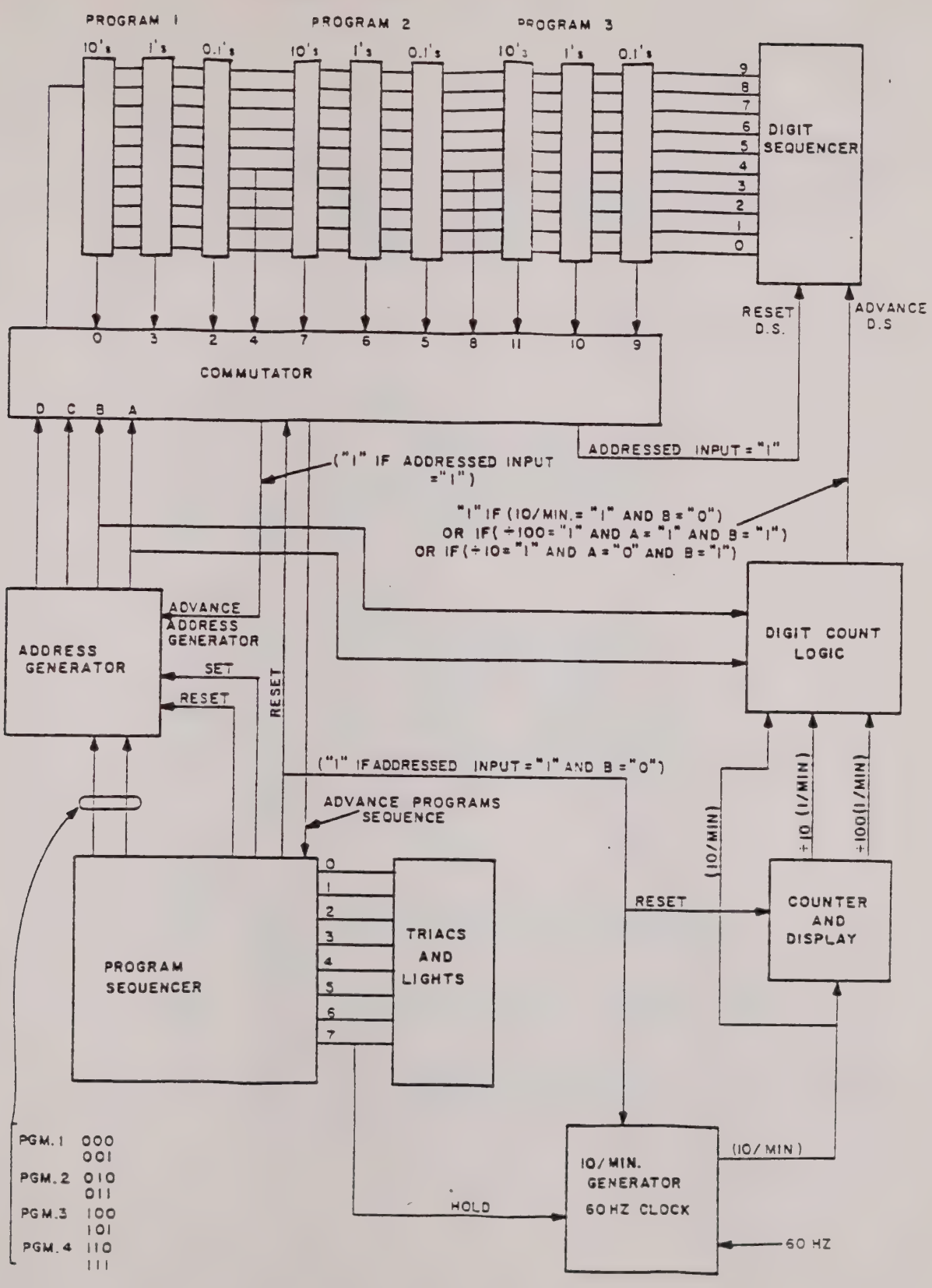
THUMBWHEEL SWITCH MATRIX
PROGRAM 1
PROGRAM 2
PROGRAM 3
10's
1's
0.1's
DIGIT SEQUENCER
RESET D.S.
ADVANCE D.S
COMMUTATOR
D C B A
ADDRESSED INPUT = "1"
("1" IF ADDRESSED INPUT = "1")
"1" IF (10/MIN. = "1" AND B = "0")
OR IF(÷100 = "1" AND A = "1" AND B = "1")
OR IF(÷10 = "1" AND A = "0" AND B = "1")
ADDRESS GENERATOR
ADVANCE ADDRESS GENERATOR
SET
RESET
DIGIT COUNT LOGIC
("1" IF ADDRESSED INPUT = "1" AND B = "0")
ADVANCE PROGRAMS SEQUENCE
(10/MIN)
÷10 (1/MIN)
÷100(1/MIN)
PROGRAM SEQUENCER
TRIACS AND LIGHTS
COUNTER AND DISPLAY
PGM.1 000 001
PGM.2 010 011
PGM.3 100 101
PGM.4 110 111
HOLD
10/MIN. GENERATOR
60 HZ CLOCK
(10/MIN)
60 HZ

FIG. 1

6.1 (Continued)

The DIGIT SEQUENCER is a "shift register" which energizes in sequence the ten busses of the MATRIX. The interval at which it increments depends upon which switch the COMMUTATOR is scanning (e.g., 10 minute interval if the COMMUTATOR is scanner one of the 10's thumbwheels) and is controlled by the DIGIT COUNT.

6.2 Logic:

The orderly sequence of events is then as outlined in the following table:

6.2.1 Depress "Reset" Button:

(1) Sets PROGRAM SEQUENCER to State "7".
(2) Sets ADDRESS GENERATOR to "1100" (12).
(3) Sets DIGIT SEQUENCER to "1000000000".
(4) Sets COUNTER AND DISPLAY to "000".
(5) Sets 10/min GENERATOR to "0" and "hold".

6.2.2 Depress "Start" Button:

(1) Sets PROGRAM SEQUENCER to state "0".
(2) Removes "hold" from 10/min GENERATOR
(3) Sets ADDRESS GENERATOR TO "0000".
(4) DIGIT COUNT LOGIC gates through 10/min signal.
(5) 10/min signal advances COUNTER AND DISPLAY.
(6) 10/min signal advances DIGIT SEQUENCER.
(7) DIGIT SEQUENCER (and COUNTER) advances with each 10/min signal until logic "1" appears at "0" input of COMMUTATOR, then:

6.2.3 Logic "1" Appears at Outputs of COMMUTATOR:

(1) PROGRAM SEQUENCER advances to state "1".
(2) ADDRESS GENERATOR advances to "0011" (3).
(3) COUNTER AND DISPLAY, 10/min GENERATOR, and DIGIT SEQUENCER reset.
(4) DIGIT COUNT LOGIC gates ":100" signal (.1/min).
(5) COUNTER AND DISPLAY proceeds to advance with each 10/min signal.
(6) DIGIT SEQUENCER advances with each .1/min signal until logic "1" appears at "3" (0011) input of COMMUTATOR (determined by the setting of Program 1 - 10's thumbwheel).

6.2.4 Logic 1" Appears at Outputs of COMMUTATOR:

(1) ADDRESS GENERATOR advances to "0010" (2).
(2) DIGIT SEQUENCER resets.
(3) DIGIT COUNT LOGIC gates ":10"in signal (1/min).
(4) COUNTER AND DISPLAY continues to advance with each 10/min signal.
(5) DIGIT SEQUENCER advances with each 1/min signal until lgoic "1" appears at "2" (0010) input of COMMUTATOR (determined by setting of Program 1 - 1's thumbwheel).

6.2.5 Logic "1" Appears at Outputs of COMMUTATOR:

(1) ADDRESS GENERATOR advances to "0001" (1).
(2) DIGIT SEQUENCER resets.
(3) DIGIT COUNT LOGIC gates 10/min signal.
(4) COUNTER AND DISPLAY continues to advance with each 10/min signal.
(5) DIGIT SEQUENCER advances with each 1/min signal until logic "1" appears at "1" (001) input of COMMUTATOR (determined by setting of Program 1 - .1's thumbwheel).

6.2.6 Logic "1" Appears at Outputs of COMMUTATOR PROGRAM SEQUENCER advances to state "2":

(1) Sequence of events described in subsection 6.2.3 repeat for each state through state "6". At this time depressing the "reset" button cycles PROGRAM SEQUENCER to state "7" described in 6.2.1.

6.3 Circuit Description:

The circuitry of the 906 is package on three printed circuit boards as follows:

(1) Mother Board
(2) Thumbwheel Board
(3) Display Board

These boards are shown schematically on drawing #D03208. This schematic is included at the end of this section, within this manual. For convenience the portion the schematic pertinent to each of the functional blocks previously described is shown separately here.

6.3.1 Commutator:

The COMMUTATOR, Figure 2, consists of a DATA SELECTOR MULTIPLEXER, SN74150, and appropriate gating. The output (W) of the multiplexer is low (zero volts) when the data input selected by the binary coded ABCD inputs is high. Otherwise the output is high. The signal ADVANCE PROGRAM SEQUENCE is therefore low when B is low and there is coincidence between ABCD address and the DIGIT SEQUENCER. U303B is a JK flip-flop providing the RESET D. S. signal one clock time delayed. The RESET input signal, described later, also generates a RESET D. S. signal (low).

6.3.2 Digit Sequencer:

The DIGIT SEQUENCER, Figure 3, is a nine stage shift register. The first stage is the U303A. The remaining stages are provided by U302, an SN74164 eight stage shift register. The JK flip-flop advances on negative going edges while the shift register advances on positive going edges. The necessary phase reversal is provided by gate U306D.

6.3.3 Address Generator:

The ADDRESS GENERATOR, Figure 4, is a two state binary counter comprised of two JK flip-flops. The counting sequence is as follows:

A	B
0	0
1	1
0	1
1	0

6.3.4 Digit Count Logic:

The DIGIT COUNT LOGIC, Figure 5, is comprised of three NAND gates whose outputs are OR'ed. The ADDRESS GENERATOR enables the appropriate gate, whose output will go positive with a negative going from the appropriate counter input. The positive going output will advance the DIGIT SEQUENCER.

6.3.5 Counter and Clock Generator:

The COUNT AND CLOCK GENERATOR produces the system clock from the 60/50 cycle since wave input by virtue of squaring circuit U211C and U211D. The COUNT signal is then provided by counter/divier, which counts the appropriate number of clock signals. The counter consists of two decade counters, U201 and U202, preceded by two binary counters, U207. The two decade counters are connected to count binquinary. Their outputs are combined in gate U213C so that the 10/min COUNT signal is given by the JK flip-flop U210.

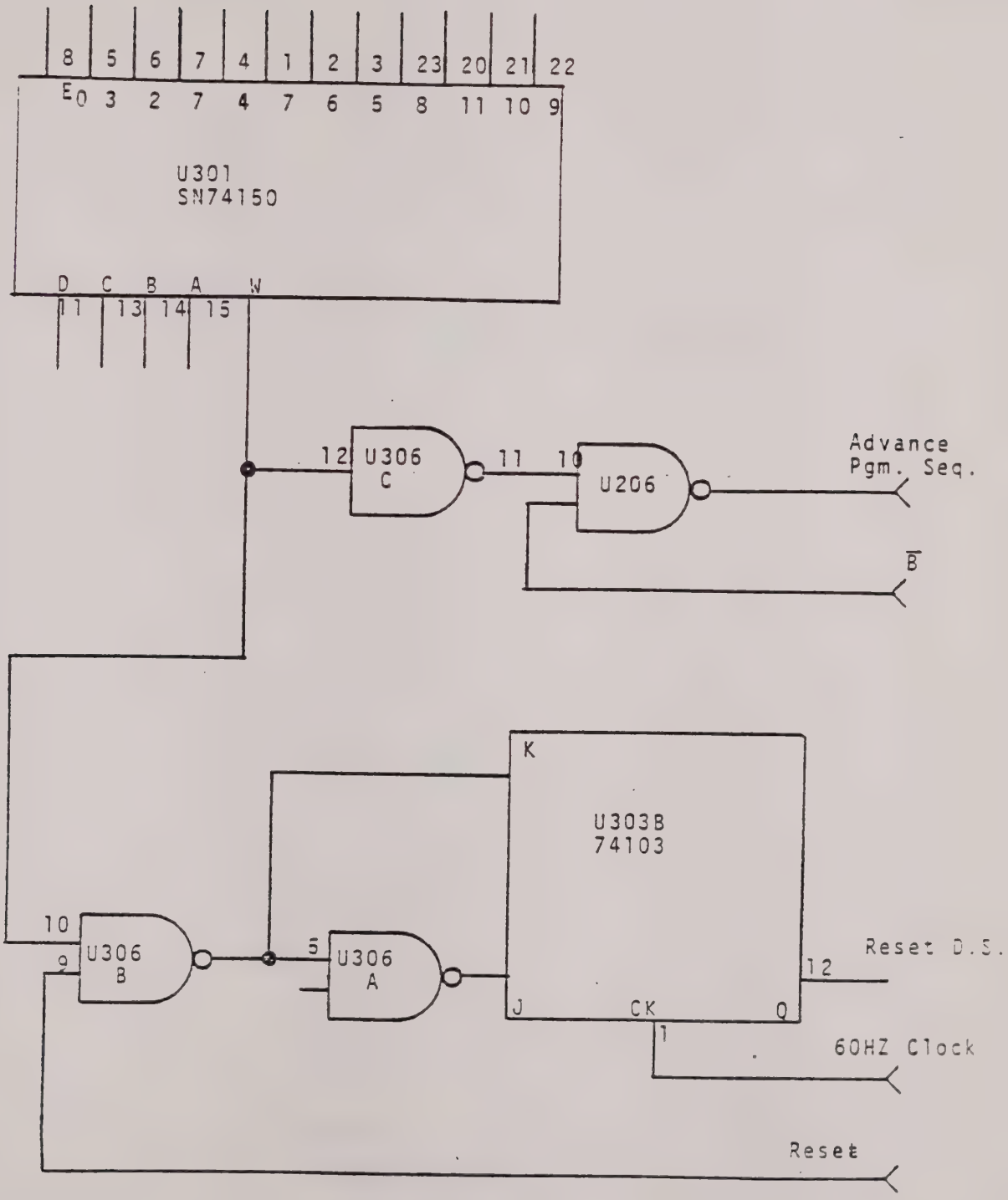
COMMUTATOR
8 5 6 7 4 1 2 3 23 20 21 22
E0 3 2 7 4 7 6 5 8 11 10 9
U301
SN74150
D C B A W
11 13 14 15
12 U306 C 11 10
U206
Advance Pgm. Seq.
B
K
U303B
74103
10
9
U306 B
5
U306 A
J CK Q
1
12
Reset D.S.
60HZ Clock
Reset

FIG.2

DIGIT SEQUENCER

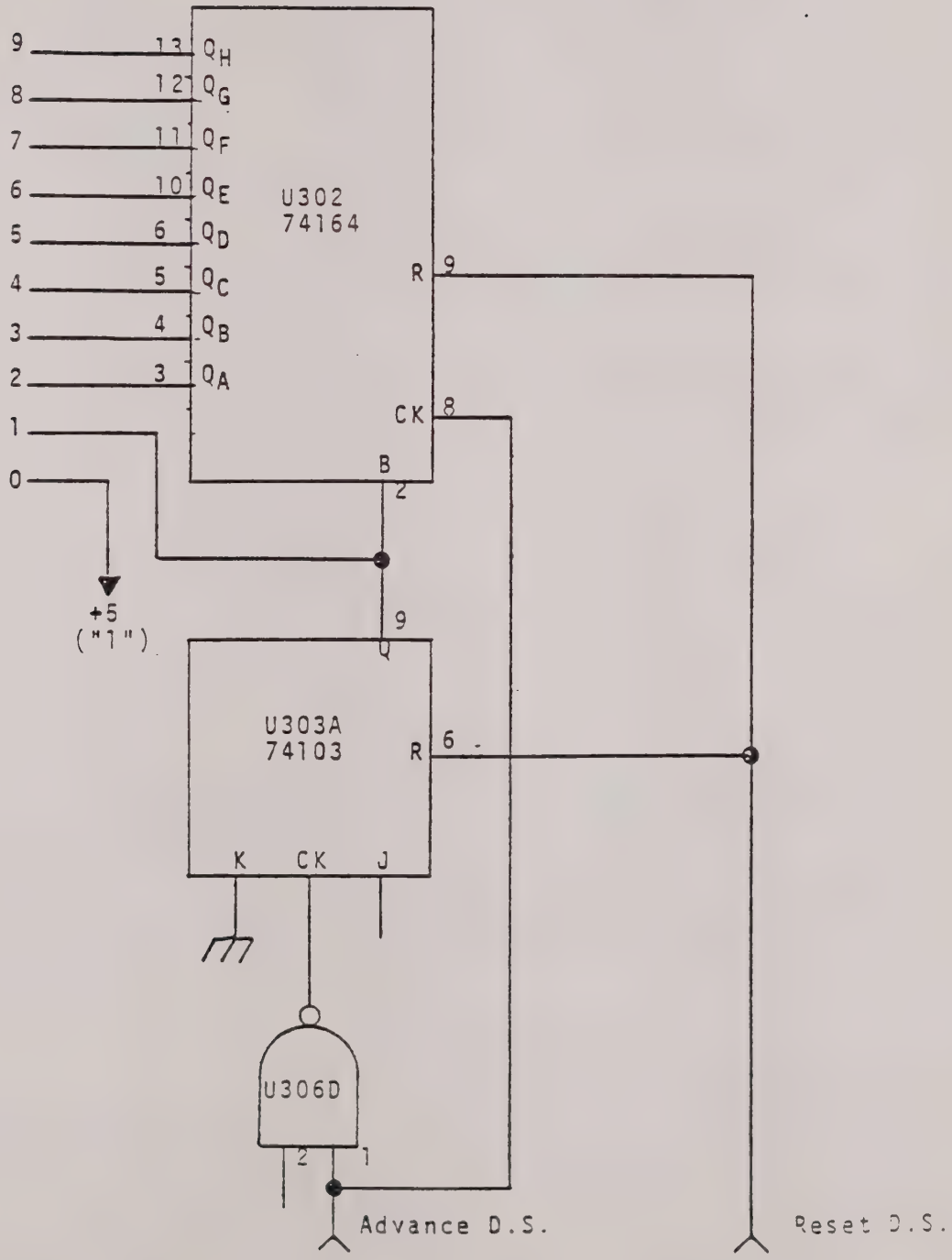

FIG.3

DIGIT COUNT LOGIC

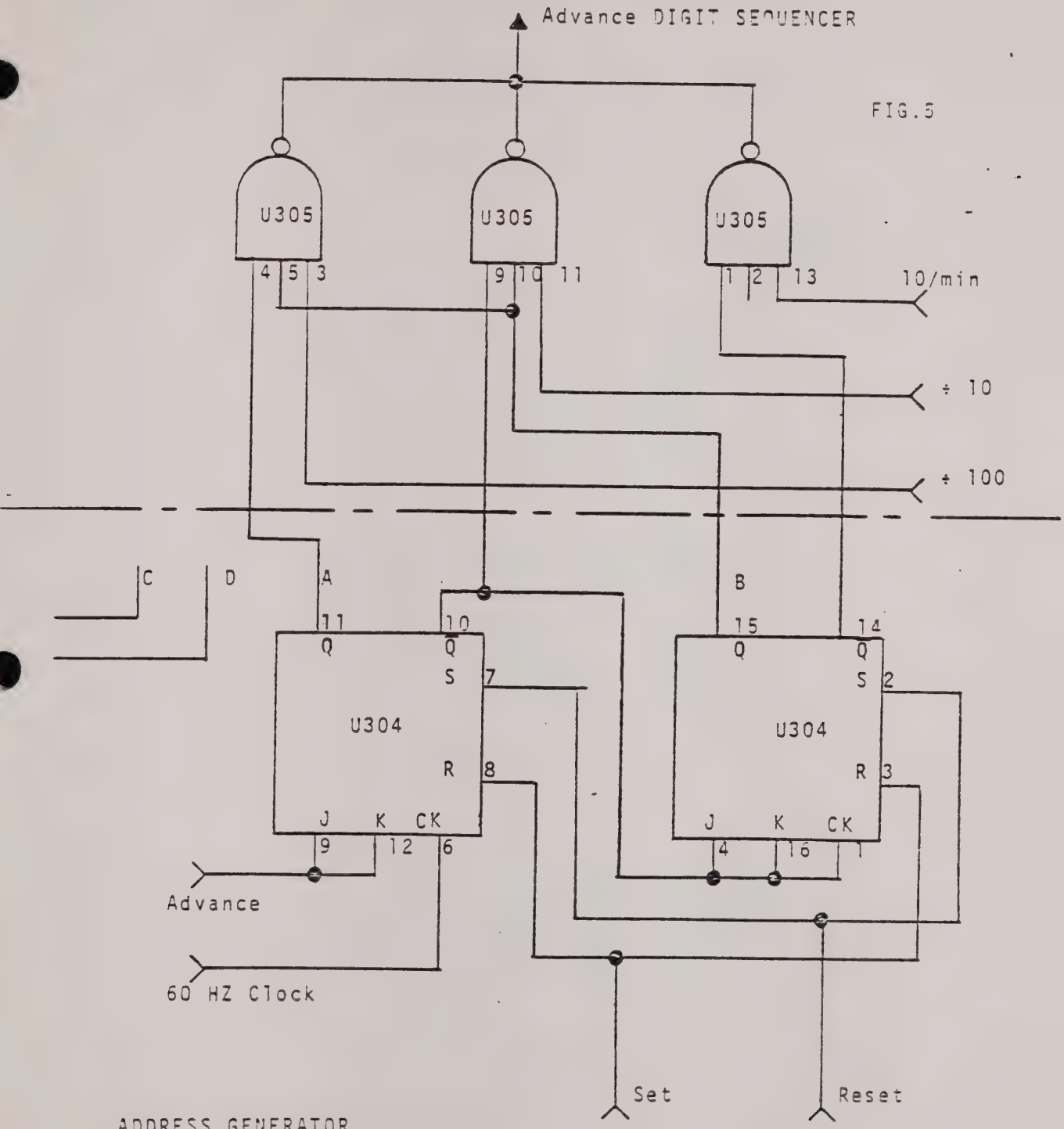

ADDRESS GENERATOR

FIG.5

FIG.4

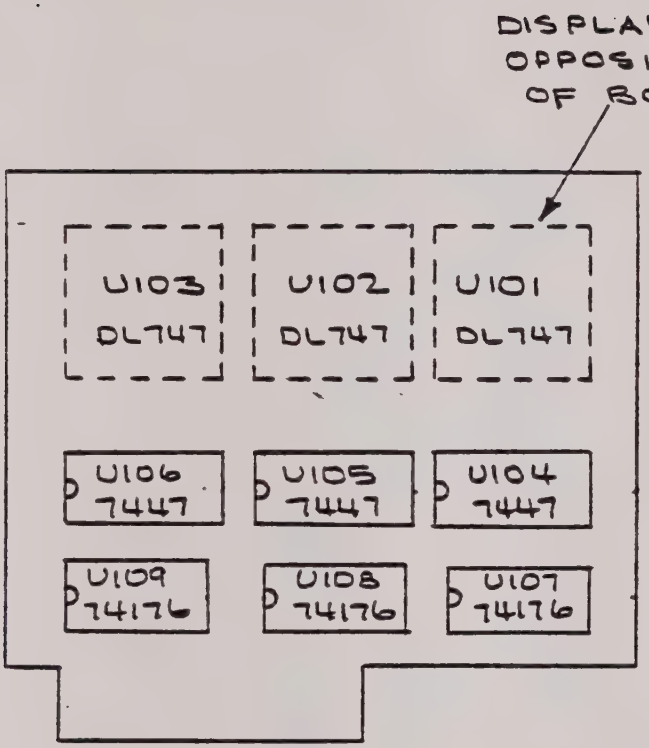

I.C. PAK LOCATIONS
906T DISPLAY BOARD
ASSY # 02892-001

FIG. 5

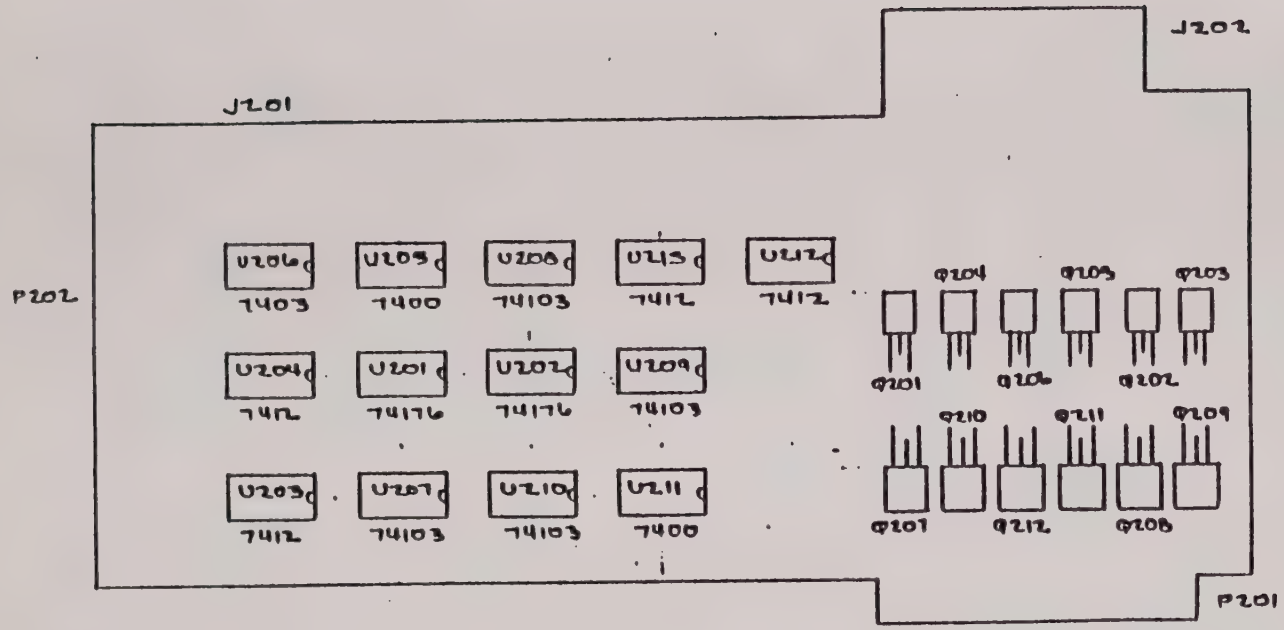

IC PAK & COMPONENT LOCATIONS

PM906T MOTHER BOARD

ASSY # 02884-001

FIG. 6

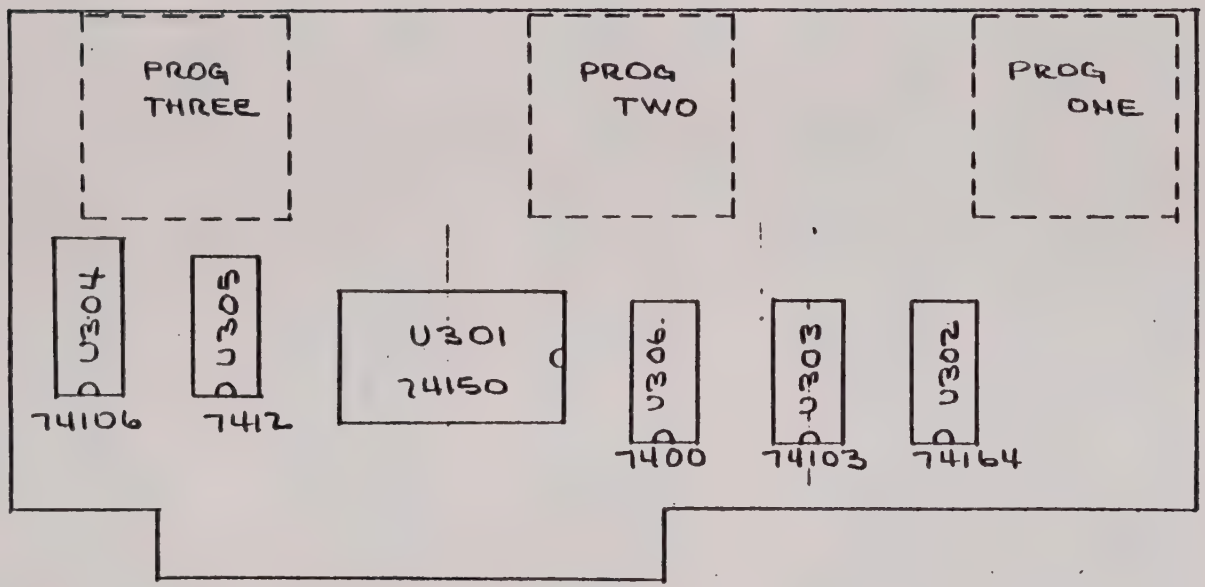

IC PAK LOCATIONS
906T THUMBWHEEL BRD.
ASSY # 02888-001

FIG. 7

6.3.6 Program Sequencer:

The PROGRAM SEQUENCER consists of three stages of binary counters and associated control logic. The counter is comprised of flip-flops FF2, FF3 and FF4 (U208 and one-half of U209). Their outputs are decoded to the eight line outputs by gates U204, U212 and U213.

FF1 drives the counter and synchronizes the various asynchronous input controls to the 60/50 cycle clock.. Gates C and D of U206 form a latch to generate one and only one advance of the counter for each depression of the front panel CYCLE switch. Gates A and B of U205 provide the SET and RESET signals for the ADDRESS GENERATOR. Either a SET or RESET signal is generated if the count is an off number.

A system clear signal is generated for each depression of the front panel RESET control by virtue of gates C and D of U205. The reset for the 10/min Generator is given by gate A of U212. The gates of U203 decode the outputs of the counter to provide the BYPASS function under control of the BYPASS switches on the front panel.

6.3.7 Triacs and Lights:

The circuitry of the TRIACS AND LIGHTS function is shown in drawing D 03208. Each triac is driven by a single transistor drive circuit. The triac in turn switches power to the appropriate relays and solenoids. Front panel lights indicating "pumpdown" are driven directly by gates of U204.

6.3.8 Vacuum Trigger:

Chamber pumpdown is terminated automatically when the pressure reaches 0.2 Torr. The base of transistor Q214 is driven by a circuit in the vacuum transducer assembly. This signal drops to zero whenever the pressure falls to less than 0.2 Torr. The collector then switches high. If the sequencer is in state, 0, 2, or 4 (a pumpdown state), the sequencer then steps to the next state.

6.4 Vacuum Meter Circuit:

The system is provided with vacuum instrumentation which, optionally, may be either the thermocouple type or capacitance manometer type. The thermocouple transducer instrument uses an analog front panel meter to display chamber vacuum level, while the capacitance manometer instrument uses a digital front panel meter. Both assemblies output vacuum trigger signals for safety interlocks and for terminating pumpdowns in automatic mode.

6.4.1 Thermocouple Vacuum Meter Circuit Description:

Refer to drawing C 10454, the vacuum meter and control circuit option schematic. The lower half of this drawing is the transducer interface and the upper half is the vacuum trigger section.

A401A, with associated resistors and capacitors, is an oscillator. This oscillator drives the primary winding of T401. At the secondary of T401 is an AC signal which drives heater elements of the thermocouple transducer.

The transducer is located at the rear of the reactor center module and it connects to J3 on the vacuum circuit board via an intermodule cable. With the heater current constant, the vacuum transducer outputs a DC voltage proportional to chamber pressure to J3, pin 8. The transducer may be calibrated by adjusting the primary current of T401 with R41 while comparing the front panel meter reading to a calibrated standard.

A402 is a comparator which is used to deenergize K401 when chamber pressure exceeds 5 Torr. The contacts of K401 are, therefore, open when pressure exceeds 5 Torr.

6.4.1 (continued)

Plus twelve volts is disconnected from pin 19 of the vacuum circuit board. This voltage is used to drive K4 in the controller (see drawing E10437),and K4 contacts connect 120 VAC to the flow solenoid valves and R. F. Control relays (K1, K2 and K3). Whenever pressure exceeds 5 Torr, reaction gas flow and RF power is disabled. The zero to minus twelve volt signal used to set RF power level is also disconnected from pin 20 of J3 when K401 is deenergized.

A401B is a comparator Pin 3 which is connected to the digital controller logic. This signal is calibrated with R40 to switch when the chamber pressure drops to 0.2 Torr. In automatic mode the digital controller uses this signal to determine when to terminate chamber pumpdown steps.

6.4.2 Capacitance Manometer Vacuum Meter Circuit Description:

Refer to drawings E10436 (2000C controller electrical schematic) and C03426 (electrical schematic, PM 410).

The MKS 222 capacitance manometer is located at the rear of the reactor center module and it connects to the vacuum trigger board via intermodule cabling. The capacitance manometer outputs a DC signal proportion to chamber pressure to J2 pin 8.

V101B is the 5 Torr comparator. Its output switches transistor Q101 which deenergizes controller relay K4 when the pressure exceeds 5 Torr. K4 then removes 120 VAC from all flow solenoid valves and RF control relays (K1, K2 and K3). This circuit prevents filling the chamber with reaction gas if the pump should fail. V101A is the 0.2 Torr comparator which provides a trigger signal at J2 pin 6 to the controller digital logic. The controller uses this signal in automatic mode to determine when to terminate pumpdown steps.

7.0 PREVENTIVE MAINTENANCE

PLASMA REACTORS AND VACUUM COMPONENTS

These items comprise the plasma chemical portions of the Plasma System. They are subjected to the greatest use, physical wear and chemical deterioration. Thus preventive maintenance of these items is of prime importance.

7.1 Vacuum Pump:

The mechanical fore pump is in continuous operation during the life of the system.. First, it is recommended that the pump be kept running continuously. The meter, bearings and other pump components are designed for continuous operation.

7.1.1 Pump Oil:

Oxidation products are continually being passed through the pump oil during operation of the machine. These products include water vapor, carbon dioxide, nitrogen oxide and, possibly, halogens or other corrosive gases. In addition to dissolving in the pump oil, some of these products can contribute to the chemical breakdown of the pump oil, increasing its viscosity, raising its vapor pressure, and "gumming up" the inside portions of the pump mechanism.

When employing the plasma System for the stripping of photoresist from silicon wafers, it is recommended that the pump oil be changed (in accordance with procedures outlined in the pump manual) after processing each 100,000 wafers. This figure assumes 2" diameter wafers, coated with 10,000 A of photoresist.

If one routinely processes larger or smaller wafers with difference resist thickness, correction can be made for the stripping of an equivalent total mass of photoresist to determine the oil changing schedule. Weekly checks are recommended to determine proper frequency of oil changes.

7.1.2 Input Filter Screen:

The vacuum pump contains a small fiber screen at its inlet. This screen collects small bits of silicon chips or other particulate material, which can act as condensation parts for pump oil vapor, with the result that the screen can become clogged with time, thus reducing the pumping speed of the pump.

This screen should be cleaned at least as often as the pump oil is changed. In any initial installation it is recommended that the screen be examined initially on a monthly basis (if the above schedule extends longer than one month) to observe the rate of material accumulation at the particular installation, and a filter cleaning schedule then be established based upon this observation.

7.1.3 Purge Valve:

At least once biweekly the purge valve on the pump should be opened slightly for a 24 hour period to allow air to diffuse through the pump to remove accumulated water vapor and other volatiles from the pump oil. The valve should be opened slighlty until a change is heard in the sound of the pump under vacuum.

7.1.4 "O" Rings:

The system contains one or more Reactors, each one with one large O-ring or bell jar gasket at the window. During use these O-rings can become stiff and inflexible and eventually develop hairline cracks. To eliminate incipient leaks caused by this, and to avoid the possible failure of a brittle O-ring during use, it is recommended that these O-rings be replaced after each 500 hours of acutal plasma operation.

7.1.5 Exhaust System:

Each of the Plasma Reactors is connected to the vacuum system by means of a flexible metal bellows assembly. At either end of this bellows assembly is a vacuum fitting which contains 3/4" silicone O-ring. These O-rings should be replaced on a routine basis as determined by visual inspection to eliminate the possiblity of unforeseen leaks.

7.2 R. F. Generator:

For maintenance instructions on R . F. Generator please refer to Section 5.0 of the GENERATOR section of the manual.

7.3 Programming Logic, Timers, and Other Digital Control Modules:

7.3.1 Controller Regulated Power Supply:

The Process Controller contains a ± 5 and ± 15 volt regulated power supply which is used to operate the digital circuitry. Part of your maintenance should consists of checking and calibrating the voltage at least once every three months. A standard 20,000 ohm per volt ohmmeter will be adequate to do the job. Refer to the information on the power supply at the end of this manual section.

7.3.2 Switches and Controls:

The Controller should be placed first in manual operation and the switches should be manually operated in their normal operation procedure several times, rapidly, while carefully observing the specified performance to the unit. Particular attention should be paid to the operation of any one of the switches giving indication of possible future failure. Should either of the switches or pushbutton assembly exhibit an intermittent characteristic, the component should be replaced.

7.3.3 Gas Flow System:

The gas flow system contains four gas switching valve assemblies and three needle valves. This constitutes the mechanical portion of the gas flow system which is normally operated in conjunction with three toggle switches which operate the needle valve assembly. The Swagelock connections should be checked and tightened periodically.

7.3.4 Switching Relays:

The control unit contains enclosed relay switching elements. These should be physically removed from their sockets and a visual inspection should be given to the closure contained within, paying particular attention to any pitting on either of the base contacts operated by the contact assembly.

Relays showing visible spots where pitting has occurred should be replaced. Generally, even with heavy operation and service, the relays should not require replacement at intervals of less than six for the worst case.

7.3.5 Interconnecting Cable Assemblies:

The interconnecting cable assemblies should be completely removed from the system and inspected for dust and residue accumulation. This is particularly true in the case of the cable assembly which interconnects the Process Controller and the Reactor. The cable assembly consists of a large multiple-pin connector and is subject to dust accumulation built up within the contact area. This may be cleaned by an application of air from a compressed air source.

!CAUTION!
BE SURE TO USE ONLY COMPRESSED AIR SOURCE FREE OF MOISTURE.

8. CAPACITANCE MANOMETER OPTION

8.1 INTRODUCTION

This option employs a capacitance pressure sensor and provides continuous digital readout of pressure in torr (mm/Hg). The digital display is 4-1/2 digits. This option is designed to operate at pressures less than 10 Torr; hence, the maximum reliable readout is +09.99 Torr. It provides digital "set-point" outputs which switch when pressure reaches a preselected level. The number the type of digital "set-point" output is described in Section 8.2.

Disregard reference in Section 4.2 to Torrmeter calibration and the associated Figure 1.

8.2 CIRCUIT DESCRIPTION

Refer to drawings C10497, the schematic diagrams for this option comprised of the following:

1) A capacitance manometer
2) A DC voltmeter
3) Vacuum trigger or "set-point" circuit boards.

The pressure transducer provided outputs a zero to ten volt DC signal proportional to pressure. The voltage level is continuously displayed on the digital voltmeter. One volt is equivalent to one Torr. When pressure rises above ten Torr, the voltmeter displays higher readings; however, these readings are not accurate.

The set points are preselected with R102 and R104. These settings should be near 5 Torr and .2 Torr respectively.

U101B compares the transducer signal voltage level to the level at the wiper arm of R102. Q102 (open collector) and Q101 switch "ON" when pressure rises above the present level.

U101A compres the transducer signal voltage level to the level at the wiper arm of R104. When pressure rises above the preset level U101A pin 1 switches from -14 volts to +14 volts.

8.3 CALIBRATION

The power supply, voltmeter, and transducer are calibrated in the factory. Frequent recalibration should not be necessary. If it becomes necessary to recalibrate any subassembly allow one hour warm up. The power supplies should be adjusted to +15 volts and -15 volts. (The adjustment potentiometers are clearly labeled on the power supply printed circuit card). The transducer power unit, mounted on the rear panel of the Torr module, has a screw driver adjustment for calibration. Calibration of the transducer should be done at base pressure by comparison with an accurate standard. Calibration of the voltmeter may be done according to the appended instruction sheet.

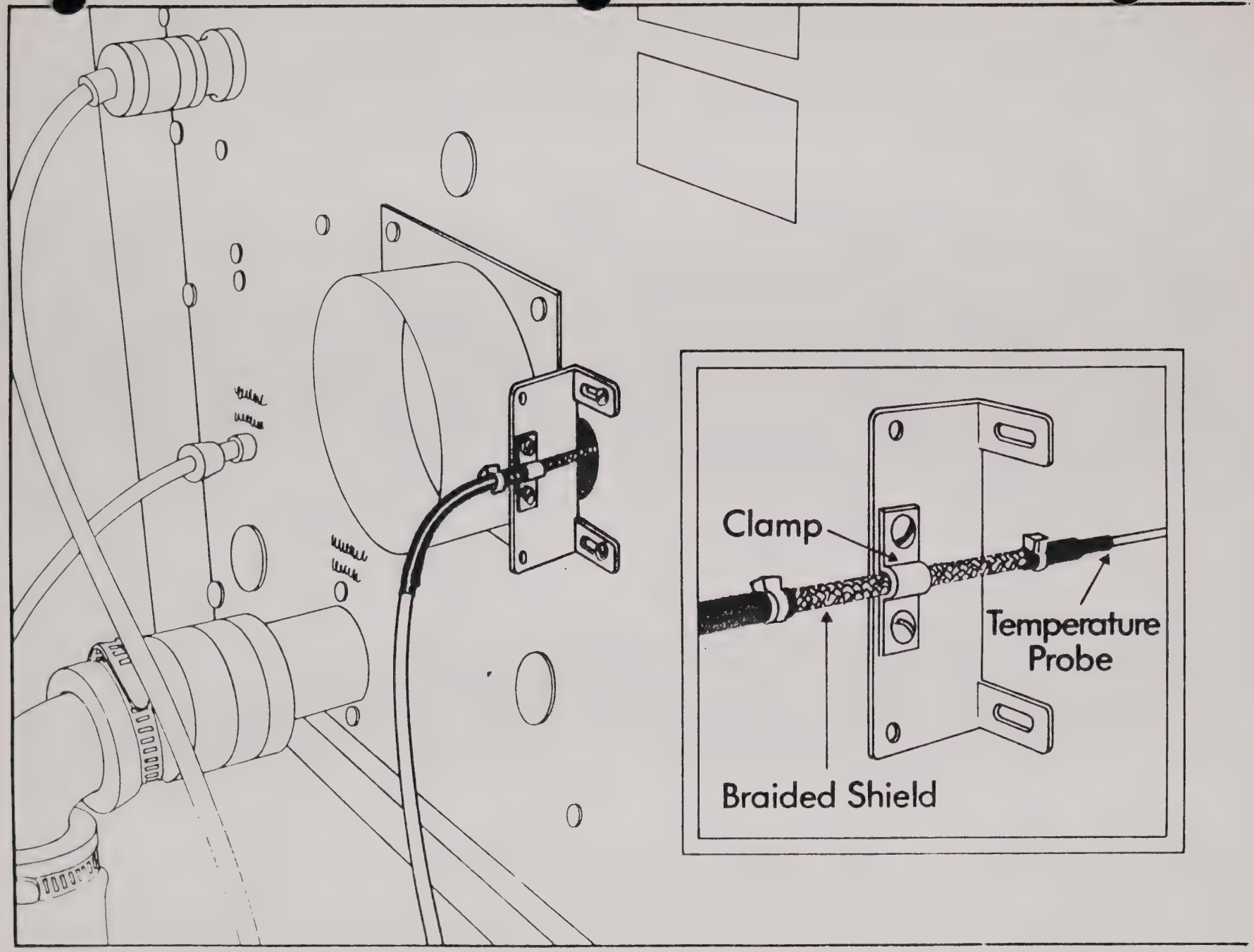

FIG 1

9. TEMPERATURE CONTROL OPTION

9.1 INTRODUCTION

This option continuously monitors Reactor Chamber temperature and displays the temperature (degrees Celsius), on a front panel digital read-out. Also included on the front panel are thumbwheel switches for pre-selecting an upper temperature limit.

A Plasma Processing Program is defined as a complete plasma process using a particular reaction gas and a particular R.F. power level. IPC Plasma Processing machines which automtically perform two or more sequential Programs may include this option to provide for a "pre-heat" Program. In this case, when it detects that the Reactor Chamber temperature coincides with the temperature pre-selected with the front panel thumbwheel switches, it outputs a signal which causes the Plasma machine to step from the first Program in the second Program. During the second and any subsequent Programs, it has no affect upon the Plasma System; however, it continues to display temperature.

9.2 INSTALLATION

All interconnect cables should be properly installed before power is switched on. The temperature sensing probe is equipped with a ground strap which must be secured firmly (mechanically and electrically) to the rear panel of the Reactor Center. The probe is inserted into the Chamber through a glass port at the rear of the Reactor. See Figure 1 for probe installation

!CAUTION!
It has been determined that there is a potential electrical shock hazard with the Temperature Probe installed in Branson/IPC Gas Plasma Systems. The Temperature Probe should be clamped by the braided shield in order to assure a proper ground. Improper grounding could cause R.F. pick-up in the cable and represents a possible shock hazard to anyone contacting the cable while the R.F. is on.

9.3 INITIAL OPERATION

9.3.1 Front Panel Controls

Three decade thumbwheel switch determines the "coincidence" temperature when operating with the Process Controller. This thumbwheel switch should not be set higher than 199. Units are degrees CELSIUS.

9.3.2 Front Panel Indicators

Temperature

Three decade digital display of the temperature of the Reactor Chamber. Units are degrees CELSIUS.

9.3.3 Normal Process Controller Operation

Set AC POWER Switch to ON, and the PROGRAM 1 switch to TIME. The Process Controller will then operate as normal and the duration of Program 1 is determined by the setting of thumbwheel switches on the front panel of the Process Controller.

9.3.4 Program 1 Preheat

Set the PROGRAM 1 switch to TEMP. Set the thumbwheel switches on the front panel to the desired preheat temperature in degrees CELSIUS. (Do not exceed a setting of 199). The Process Controller will operate as normal except the duration of the first Program will be determined by the Temperature Option and will advance to the second Program when the temperature reaches the value set on the front panel thumbwheels. The temperature will be controlled only if the RF power level used during the subsequent Programs is less than is required to maintain the Chamber at the set temperature.

9.4 FUNCTIONAL DESCRIPTION

The block diagram is showin in Figure 2. It consists functionally of an analog-to-digital Converter, which converts the resistance to the temperature sensitive probe to a digital representation of the temperature; and a Controller, which compares the temperature with the value set on the front panel switches. The Controller also generates a signal signifying coincidence between the measure temperature and the set temperature and transmits this signal to the Process Controller.

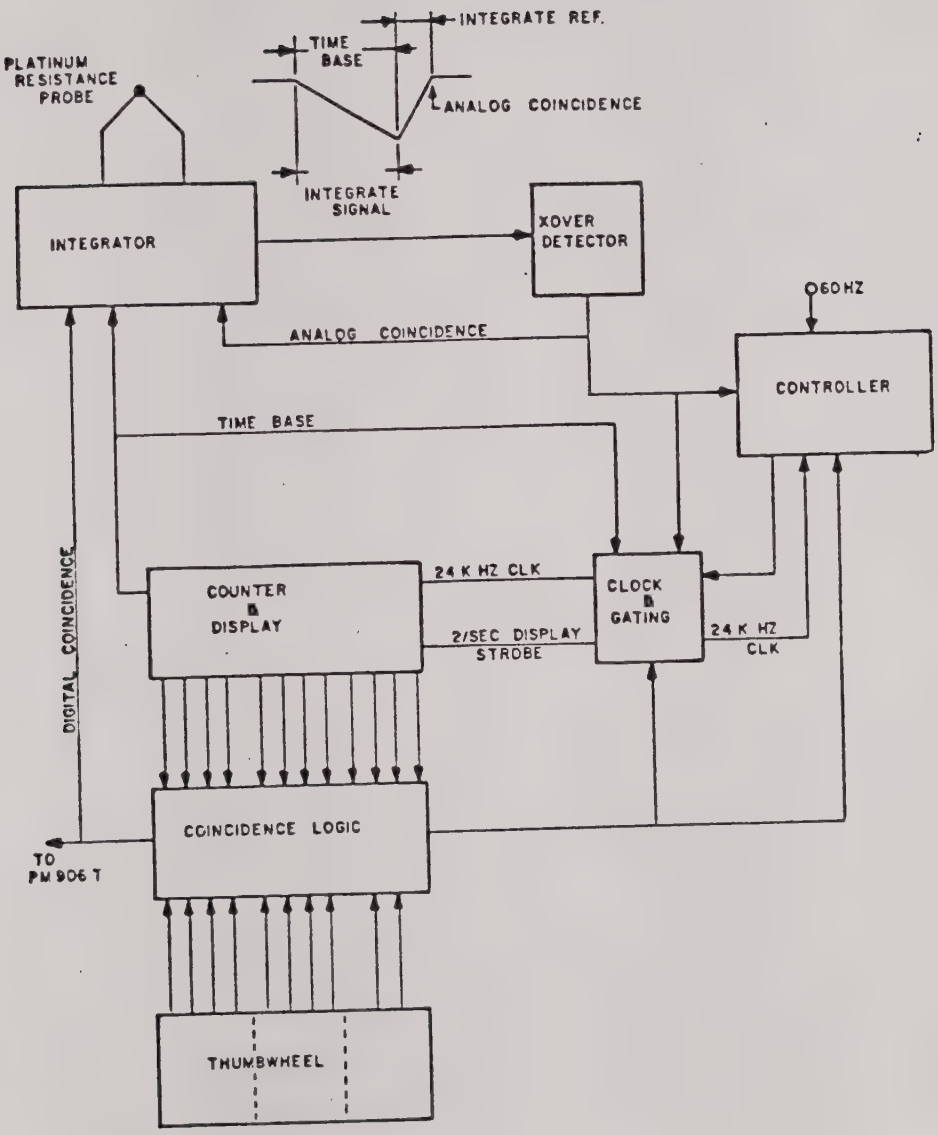
INTEGRATE REF.
TIME BASE
PLATINUM RESISTANCE PROBE
ANALOG COINCIDENCE
INTEGRATE SIGNAL
INTEGRATOR
XOVER DETECTOR
60 HZ
ANALOG COINCIDENCE
CONTROLLER
TIME BASE
DIGITAL COINCIDENCE
COUNTER & DISPLAY
24 K HZ CLK
CLOCK & GATING
2/SEC DISPLAY STROBE
24 K HZ CLK
COINCIDENCE LOGIC
TO PM 906 T
THUMBWHEEL

9.4 Figure 2

9.4.1 Analog-to-Digital Converter

The analog-to-digital Converter is comprised of the four functional blocks; the INTEGRATOR, the XOVER DETECTOR, the COUNTER AND DISPLAY, and the CLOCK AND GATING. The Converter is basically a dual ramp type, whereby the INTEGRATOR first integrates a current proportional to the probe resistance or temperature for a fixed time, and then integrates a reference current of opposite polarity until the integrated value returns to its original value. The time required to integrate the reference is then representative of the probe temperature. This time interval, as well as the time interval of probe integration, is measured digitally by the COUNTER AND DISPLAY. It includes a digital Counter which counts the output of a reference oscillator. The first integrating interval is determined by the time required for the Counter to count to full scale, i.e. 199. The Counter then counts the time required for the second integrating interval and the resulting value is displayed on the front panel.

9.4.2 Controller

The Controller is comprised of the three functional blocks; the CONTROLLER, the COINCIDENCE LOGIC, and the THUMBWHEEL SWITCHES. The Coincidence Logic detects coincidence between the Counter and the setting of the Thumbwheel Switches during the second integrating interval. A signal denoting coincidence is generated and transmitted to the Proces Controller. The Controller measures the difference between coincidence and the measured temperature by counting the number of reference clock cycles that analog coincidence (end of the second integrating interval) exceeds digital coincidence.

9.5 CIRCUIT DESCRIPTION

The Temperature Option is shown schematically in drawing D02905.

9.5.1 Clock and Gating

The reference oscillator is comprised of amplifier U113A and surround circuitry. R106 provides fine adjustment of the frequency which is 24KHZ. Inverters U112A and U104A shape the output wave form consistent with TTL requirements.

Division of the two period 60/50 cycle period into four parts requires the generation of 120HZ pulses synchronous with the input power. This is accomplished by amplifying the input via U113B for easy detection of zero cross-over. The outputs of inverters U104B and U123A are then two 60/50HZ square waves of opposite polarity. Each output is differentiated by the capacitor-resistor circuitry C107, R119, R118 and C108, R120, 121. The resulting narrow pulses are shaped by the inverters of U123, and the output of gate U117A is a wave form of 120HZ positive going pulses.

Since a full sequence requires 33.3 milliseconds, it would be disconcerting to the eye to display every conversion. Therefore only one of sixteen conversions is selected for display. for an update of approximately two per second. The four stage binary counter of U116 divides the "analog coincidence" signal (there is one per sequence and will be described later). Its output is differentiated and then shaped by U112B, which output is used to update the digital display.

Gate U11 provides the gating of the Clock to the Counter. Its other inputs will be described later.

9.5.2 Counter and Display

The system Counter, whose full count is 199, consists of three decades of binary-coded-decimal. These are U105, U106, and U107. Their outputs are decoded by U108, U109, and U110; then buffered by U201, U202, and U203, which drive the LED displays. The serial output of the Counter drives flip-flop U114A to establish the end of the first integrating interval.

9.5.3 Integrator

The integrator is comprised of an operational amplifier, U121 with a feed-back capacitor C103. The voltage at the output of the amplifier is the integral of the current into the amplifier-capacitor combination. The input is switched between the probe signal and the reference current by the FET switches of U122. The reference current is given by the series combination of the negative 15 volt supply and resistors R111 and R110. The probe is connected directly to the positive input terminal of the amplifier, and a nearly constant current forced through it by the negative 15 volt supply through R128. The voltage at the positive terminal then varies with the temperature of the probe. A nearly constant voltage is generated at the input to FET switch B. Thus when FET switch B closes the current into the amplifier is proportional to the temperature of the probe. Potentiometers R109 and R111 serve as offset as scale adjustments respectively.

9.5.4 Xover Detector

The cross-over detector, which signals the end of the second integrating interval, consists of amplifier U121B. Inverters U118A and B and capacitor C104 form a pulse shaping network. The outputs of this network, A and A, signify the end of the second integrating interval. Signal A is sometimes referred to and "analog coincidence".

9.5.5 Controller

The heart of the Controller is the two stage binary Counter U115. Its serial output sets the flip-flop of U114B, which signifies that the Counter has counted to four. At the start of each sequence the Counter is set to zero. The start of a sequence is either digital coincidence, D, or analog coincidence, A., whichever comes first. If D preceeds A, which is the condition if the temperature of the probe is too hot, the Counter proceeds to count the 24KHZ clock pulses until A occurs. At this time the Counter ceases to count the 24KHZ pulses and proceeds to count the 120HZ pulses.

The reset pulse starting each sequence is generated by a latch comprised of U119C and U120C. The latch is set with the first occurrence of analog or digital coincidence, i.e., A. or D. The negative going edge at the output of U120C is differentiated, and the resulting pulse is the reset for the Counter. The latch is reset by U114A at the beginning of the second integrating interval.

In order to maintain digital coincidence during the interval starting with digital coincidence and ending with analog coincidence, the main Counter (part of COUNTER AND DISPLAY) must be stopped. This is accomplished by the appropriate combinations of D, A, U114A, and U114B in the gate of U111.

9.5.6 Coincidence Logic

Coincidence between the setting of the front panel thumbhweel switches and the main Counter (referred to previously as digital coincidence of D) is accomplished by the gate structure of U101, U102, and U103. The inverters of U112 and U104 provide the correct polarity to the gates. The outputs of the gate structure is inverted by an inverters of U118, and "latched" by gates A and B of U123. This latched output is transmitted to the Process Controller. The latch is reset by signal O from the Process Controller.

Power-One INC.

D.C. POWER SUPPLIES

INTERNATIONAL SERIES
DC POWER SUPPLIES

DRAWING NO. 51281 REV. D

SPECIFICATIONS AND APPLICATION DATA

INTERNATIONAL SERIES DESCRIPTION

The INTERNATIONAL SERIES is a high reliability line of open-frame power supplies designed to operate from the wide range of AC power sources found worldwide.

This feature greatly simplifies your inventory and service considerations by allowing the use of one standard power supply regardless of destination.

Additionally, these models are designed to meet many domestic and European regulatory agency requirements.

If you plan to distribute your products worldwide, obtaining necessary agency approvals can be greatly simplified by specifying POWER-ONE, INC. INTERNATIONAL SERIES.

VOLTAGE/CURRENT RATING CHART

MODEL	+5V	+12V	+15V	+24V	+28V	-5V	-12V	-15V	CASE
SINGLE OUTPUT									
HB5-3/OVP-A	3.0								B
HB12-1.7-A		1.7							B
HB15-1.5-A			1.5						B
HB24-1.2-A				1.2					B
HB28-1-A					1.0				B
HC5-6/OVP-A	6.0								C
HC12-3.4-A		3.4							C
HC15-3-A			3.0						C
HC24-2.4-A				2.4					C
HC28-2-A					2.0				C
HN5-9/OVP-A	9.0								N
HN12-5.1-A		5.1							N
HN15-4.5-A			4.5						N
HN24-3.6-A				3.6					N
HN28-3-A					3.0				N
HD5-12/OVP-A	12.0								D
HD12-6.8-A		6.8							D
HD15-6-A			6.0						D
HD24-4.8-A				4.8					D
HD28-4-A					4.0				D
HE5-18/OVP-A	18.0								E
HE12-10.2-A		10.2							E
HE15-9-A			9.0						E
HE24-7.2-A				7.2					E
HE28-6-A					6.0				E
DUAL OUTPUTS									
HAA15-0.8-A		1.0 or 0.8				†0.4 or	1.0 or 0.8		AA
HBB15-1.5-A		1.7 or 1.5				†0.7 or	1.7 or 1.5		BB
HCC15-3-A		3.4 or 3.0					3.4 or 3.0		CC
HDD15-5-A		5.0 or 5.0					5.0 or 5.0		E
HAA512-A	2.0	*0.5	*0.5						AA
HBB512-A	3.0	*1.25	*1.25						BB
HCC512-A	6.0	*2.5	*2.5						CC
TRIPLE OUTPUTS									
HTAA-16W-A	2.0	*0.4	*0.4			†0.4	or *0.4	or *0.4	AA
HBAA-40W-A	3.0	1.0 or 0.8				†0.4	or 1.0	or 0.8	BAA
HCAA-60W-A	6.0	1.0	or 1.0			†0.4	or 1.0	or 1.0	D
HCBB-75W-A	6.0	1.7 or 1.5				†0.7	or 1.7	or 1.5	CBB
CP131-A	8.0	1.7 or 1.5				†0.7	or 1.7	or 1.5	131
HDBB-105W-A	12.0	1.7 or 1.5				†0.7	or 1.7	or 1.5	DBB

MODEL	+5V	+12V	+24V	-5V	-12V	-15V	
DISC DRIVES							
CP379-A	6.0		3.5 (3.0 PK)	1.2	1.2		131
CP364-A	9.0		2.0 (8.0 PK)	1.2	1.2		131
CP323-A	2.0	4.0					N
CP205-A	1.0		1.5 (1.7 PK)	0.5			BAA
CP206-A	2.5		3.0 (3.4 PK)	0.5			CBB
CP162-A	3.0		5.0 (6.0 PK)	0.6			131

*9V to 15V Floating Output
†Requires jumper on PCB for -5V
Underlined output indicates no remote sense

FEATURES

- VDE transformer construction
- 100/120/220/230-240 VAC
- Remote sense - most outputs
- OVP on 5V outputs
- ±.05% regulation
- Industry standard size
- Foldback/current limit
- Full-rated to 50°C
- I.C. burned-in to MIL-883 Lev B
- 2 hour burn-in period
- Two year warranty
- UL recognized
- CSA certified
- Chassis notched for AC input
- Input accepts .110 x .032 fast-c or solder connection

SPECIFICATIONS

AC INPUT:	100/120/220/230-240VAC** +10%, -13% 47-63 HZ (Derate output current 10% for 50 Hz operation.) See AC connection table under APPLICATION NOTES for jumper information. Fuse information is next to outline and mounting drawings.
DC OUTPUT:	See Voltage/Current Rating Chart. Adjustment range ±5% minimum.
LINE REGULATION:	±.05% for a 10% line change
LOAD REGULATION:	±.05% for a 50% load change
OUTPUT RIPPLE:	2V to 15V unit: 5.0mV PK-PK maximum 20V to 200V unit: .02% PK-PK maximum
TRANSIENT RESPONSE:	50μseconds for 50% load change
SHORT CIRCUIT AND OVERLOAD PROTECTION:	Automatic current limit/foldback
OVERVOLTAGE PROTECTION:	Built-in on all 5V outputs. Set at 6.2V ± .4V. Other models use optional overvoltage protection
REMOTE SENSING:	Provided on most models, open sense lead protection built-in
STABILITY:	±0.3% for 24 hour period after 1 hour warm-up
TEMPERATURE RATING:	0°C to 50°C full-rated, derated linearly to 40% at 70°C
TEMPERATURE COEFFICIENT:	±.03%/°C maximum
EFFICIENCY: (typical)	5V unit: 45%; 12V and 15V units: 55% 20V and 24V units: 60%
VIBRATION:	Per MIL-STD-810C, Method 514, Procedure X
SHOCK:	Per MIL-STD-810C, Method 516, Procedure V

**Tolerance for 230VAC operation is +15%, -10%

WARRANTY

POWER-ONE, INC. warrants each power supply of its manufacture that does not perform to published specifications, as a result of defective materials or workmanship, for a period of two (2) full years from the date of original delivery.

POWER-ONE, INC. assumes no liabilities for consequential damages of any kind through the use or misuse of its products by the purchaser o others. No other obligations or liabilities are expressed or implied

PRODUCTS RETURNED FOR REPAIR

Please follow this procedure when returning products for servicing:

1. Contact Power-One's Customer Service Department for authorization to return products.

   POWER-ONE, INC.
   740 Calle Plano
   Camarillo, CA 93010
   USA

   PHONE: (805) 484-2806
   (805) 987-3891
   (800) 235-5943
   TWX: 910-336-1297

2. A Returned Material Authorization (RMA) will be issued and must appear on all shipping documents and containers.
3. Products must be returned freight pre-paid

Products returned freight collect or without a RMA number will be rejected and returned freight collect

REMOTE SENSE

Remote sense terminals may be used to compensate for output line losses and provide for a remote point of regulation. Figure 1 shows the proper termination for a power supply with remote sensing.

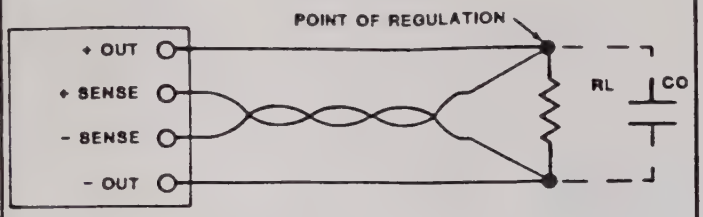

FIGURE 1

Load lines must be sized to prevent an excessive voltage drop from the output to the load. Since the point of regulation is at the load, the power supply must compensate for line losses. Excessive load line losses may affect current limiting, AC line dropout point and OVP margin (if applicable).

Leads should be sized to drop no more than 0.5V - the less the better. Use of a twisted pair or shielded pair for the sense lines is recommended for noise immunity. In problem applications, the use of a small AC decoupling capacitor (.1 to 10uFd) across the sense terminals is highly recommended. In some applications there may be a tendency for the power supply to oscillate due to the additional phase shift caused by the series resistance and inductance in the load leads. The addition of capacitor Co will reduce output impedance and provide stability. The recommended value of Co is 100uFd per ampere or 50uFd per foot and can be the sum of the distributed decoupling capacitors found in most systems.

All Power-One supplies have open sense lead protection to protect the [illegible] from an overvoltage condition if the sense leads are removed. There is no need to strap the sense terminals to the output terminals in the local sense mode.

OVERVOLTAGE PROTECTION (OVP)

An overvoltage protection circuit, commonly referred to as a crowbar, is used to prevent damage to voltage sensitive loads such as TTL logic. Trip point of the OVP is usually set at 115% - 135% of the output voltage. The OVP will short the output terminals upon sensing a fault condition. The primary fuse of the supply will blow if the supply is not foldback current limited. Nuisance tripping of the OVP is a common problem. Noise from input line spikes or load noise can cause an OVP to fire. The INTERNATIONAL SERIES has OVP noise filtering to prevent nuisance tripping and reduced transformer interwinding capacitance to minimize input line susceptability.

COMMON-MODE LATCH UP

In certain instances dual power supplies can exhibit a problem known as common-mode latch up. This occurs when the positive supply comes up first and forces a reverse bias condition on the negative supply. The negative supply latches up in a current limit condition. Power-One has incorporated a unique anti-latch circuit into every dual power supply in the INTERNATIONAL SERIES which will minimize this problem.

EMI/RFI

These linear power supplies have inherently low conducted and radiated noise levels. For most system applications they will meet the requirements of FCC Docket 20780 for Class A equipment and VDE 0871 for Class A equipment without additional noise filtering. For special applications consult factory.

PRINTED CIRCUIT BOARDS

POWER-ONE, INC.'s printed circuit board fabrication facility is recognized under the component program by Underwriters Laboratories. All boards meet UL 94V-0 flammability specification.

SAFETY SPECIFICATIONS

The INTERNATIONAL SERIES power supplies were designed to meet or exceed the requirements for the following specifications: IEC 380, IEC 435, VDE 0730 Part 2, VDE 0804, ECMA-57, CEE 10 Part 2P, UL 1012, CSA 22.2 No. 143, CSA 22.2 No. 154. Specifically, field terminal to terminal spacing is 5.25 mm with 9.0 mm creepage to other metal, leakage current is less than 5.0uA and dielectric withstanding voltages are 3750 VAC input to chassis, 3750 VAC input to output and 300 VDC output to chassis.

GROUNDING

Grounding considerations in designing a power distribution system are often overlooked but can have a significant impact on overall system performance. A single point system ground should be employed where possible to eliminate ground loops and improve regulation.

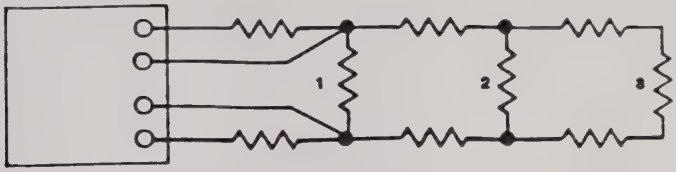

FIGURE 2

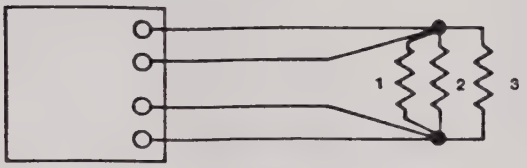

FIGURE 3

Figure 2 shows a simple but undesirable connection scheme. Regulation at loads 2 and 3 becomes progressively worse due to voltage drops in the finite wire resistance between loads. Figure 3 shows an improved connection system in which regulation is maintained at all three loads because wire losses are not cumulative.

AC INPUT CONSIDERATIONS

Almost all power supplies use a capacitive input filter that draws current only at the peaks of the AC input voltage. The peak to RMS ratio can be very high, typically 3 to 1. When a supply is turned on, the input capacitor has a very low impedance and draws an initially high surge current until it charges to its nominal voltage. The input surge current can be as high as 20 times the rated input current and lasts for several cycles of the AC input.

AC CONNECTION AND FUSING *

The five wire input to the INTERNATIONAL SERIES provides four voltage ranges: 100/120/220/230-240** +10%, -13%. See chassis AC connection table (Figure 4) for the jumpering requirements. For convenience the jumper sequence from the Hi-Vol series is retained. Extended low line tolerance provides additional drop out margin in areas where line voltages are marginal. Inputs must be fused.

FIGURE 4

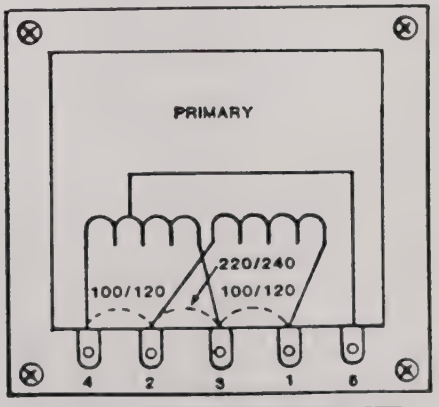

AC INPUT, 47-63 HZ				
FOR USE AT	100 VAC	120 VAC	220 VAC	230/240 VAC
JUMPER	1&3 2&4	1&3 2&4	2&3	2&3
APPLY AC	1&5	4&1	1&5	4&1

*NOTE: Use 700°C. iron for soldering input connections. Varnish acts as flux and is solder strippable.
**Tolerance for 230VAC operation is +15%, -10%.

B CASE
WT. 2LBS

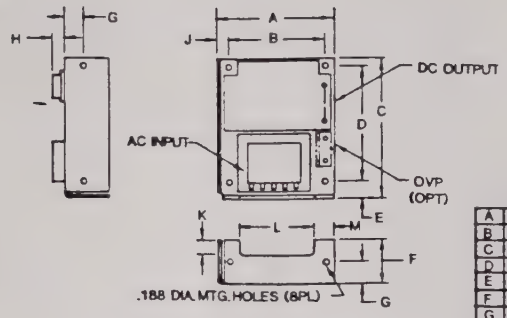

	INCH	mm
A	4.00	101.60
B	3.375	85.73
C	4.87	123.70
D	4.125	104.78
E	0.50	12.70
F	1.62	41.15
G	0.75	19.05
H	0.450	11.43
J	0.38	9.65
K	0.57	14.48
L	2.60	66.04
M	0.794	20.17

FUSE AT: 0.5/0.25 AMPS FOR 100-120/220-240 VAC

C CASE
WT 4LBS

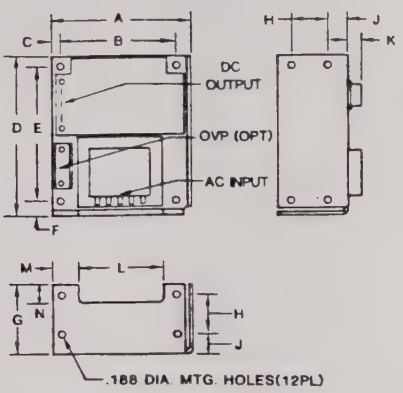

	INCH	mm
A	4.87	123.70
B	4.125	104.78
C	0.25	6.35
D	5.62	142.74
E	4.875	123.83
F	0.50	12.70
G	2.50	63.50
H	1.250	31.75
J	0.75	19.05
K	0.450	11.43
L	2.85	72.39
M	1.025	26.04
N	0.665	16.89

FUSE AT: 1.0/0.5 AMPS FOR 100-120/220-240 VAC

N CASE
WT. 6LBS.

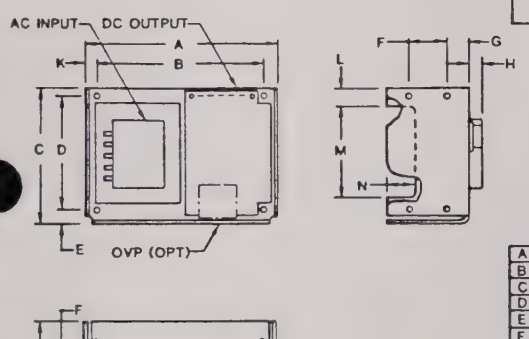

	INCH	mm.
A	7.00	177.80
B	6.250	158.75
C	4.87	123.70
D	4.125	104.78
E	0.50	12.70
F	1.250	31.75
G	0.75	19.05
H	0.450	11.43
J	2.75	69.85
K	0.38	9.65
L	0.640	16.26
M	3.35	85.09
N	1.00	25.40

FUSE AT: 2.0/1.0 AMPS FOR 100-120/220-240 VAC

D CASE
WT 7.5LBS.

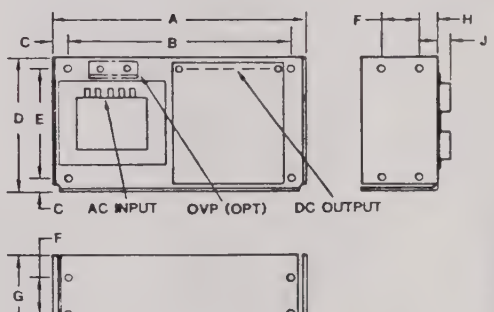

	INCH	mm.
A	9.00	228.6
B	8.000	203.20
C	0.50	12.70
D	4.87	123.70
E	4.125	104.78
F	1.250	31.75
G	2.75	69.85
H	0.75	19.05
J	0.450	11.43

FUSE AT: 2.0/1.0 AMPS FOR 100-120/220-240 VAC

E CASE
WT. 10LBS

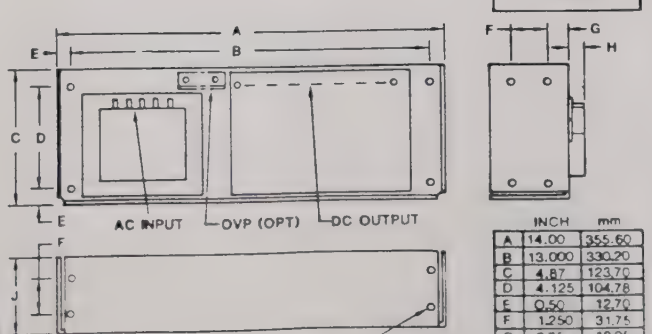

	INCH	mm
A	14.00	355.60
B	13.000	330.20
C	4.87	123.70
D	4.125	104.78
E	0.50	12.70
F	1.250	31.75
G	0.75	19.05
H	0.650	16.51
J	2.75	69.85

FUSE AT: 3.0/1.5 AMPS FOR 100-120/220-240 VAC

AA CASE
WT 2LBS

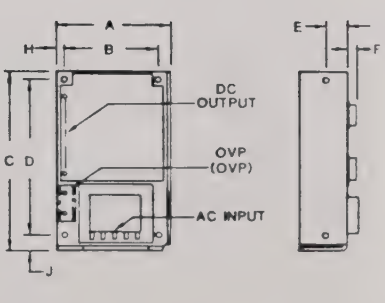

	INCH	mm
A	4.00	101.6
B	3.375	85.73
C	6.50	165.1
D	5.750	146.1
E	0.75	19.05
F	0.450	11.43
G	1.62	41.15
H	0.25	6.35
J	0.50	12.7
K	0.955	24.26
L	2.37	60.2
M	0.57	14.48

FUSE AT: 0.5/0.25 AMPS FOR 100-120/220-240 VAC

CC CASE
WT. 7LBS

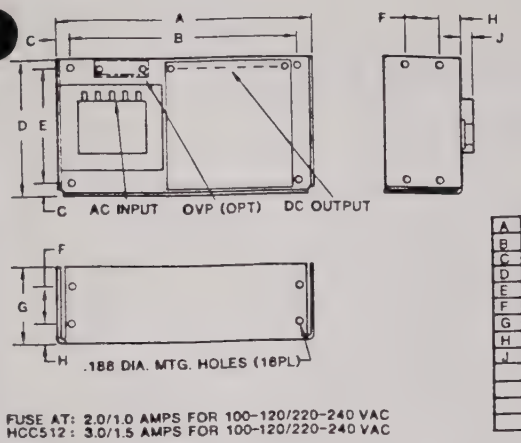

	INCH.	mm.
A	9.38	238.25
B	8.375	212.73
C	0.50	12.70
D	4.87	123.70
E	4.125	104.78
F	1.250	31.75
G	2.75	69.85
H	0.75	19.05
J	0.450	11.43

FUSE AT: 2.0/1.0 AMPS FOR 100-120/220-240 VAC
HCC512 : 3.0/1.5 AMPS FOR 100-120/220-240 VAC

BB CASE
WT 4LBS

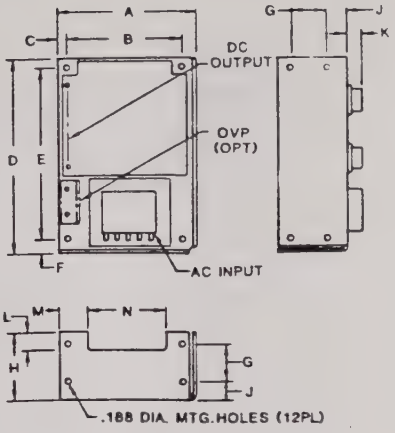

	INCH	mm
A	4.87	123.70
B	4.125	104.78
C	0.25	6.35
D	7.00	177.80
E	6.250	158.75
F	0.50	12.70
G	1.250	31.75
H	2.50	63.50
J	0.75	19.05
K	0.450	11.43
L	0.665	16.89
M	1.025	26.04
N	2.85	72.39

FUSE AT: 1.0/0.5 AMPS FOR 100-120/220-240 VAC

BAA CASE
WT. 5LBS

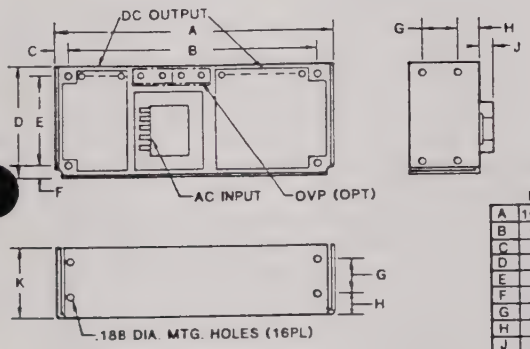

	INCH.	mm.
A	10.25	260.35
B	9.250	234.95
C	0.50	12.70
D	4.00	101.60
E	3.375	85.73
F	0.37	9.40
G	1.250	31.75
H	0.75	19.05
J	0.450	11.43
K	2.50	63.50

FUSE AT: 1.0/0.5 AMPS FOR 100-120/220-240 VAC

CBB CASE
WT. 8LBS.

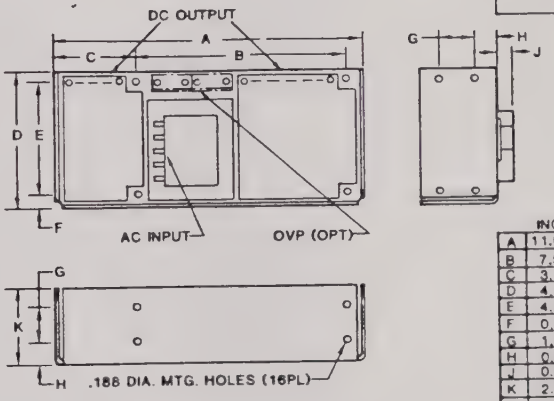

	INCH	mm.
A	11.00	279.40
B	7.500	190.50
C	3.00	76.20
D	4.87	123.70
E	4.125	104.78
F	0.50	12.70
G	1.250	31.75
H	0.75	19.05
J	0.450	11.43
K	2.75	69.85

FUSE AT: 2.0/1.0 AMPS FOR 100-120/220-240 VAC

DBB CASE
WT. 11LBS.

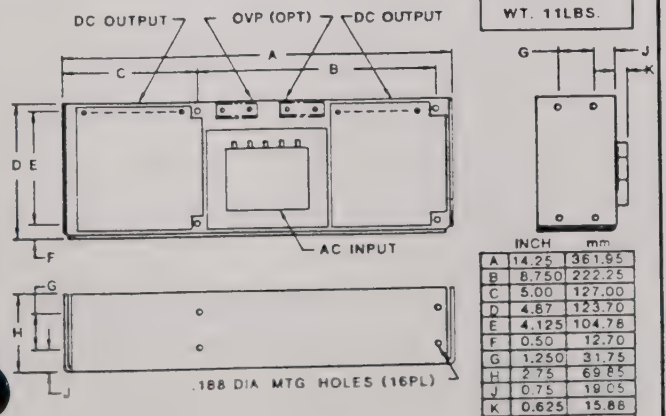

	INCH	mm
A	14.25	361.95
B	8.750	222.25
C	5.00	127.00
D	4.87	123.70
E	4.125	104.78
F	0.50	12.70
G	1.250	31.75
H	2.75	69.85
J	0.75	19.05
K	0.625	15.88

FUSE AT: 3.0/1.5 AMPS FOR 100-120/220-240 VAC

131 CASE
WT. 9LBS

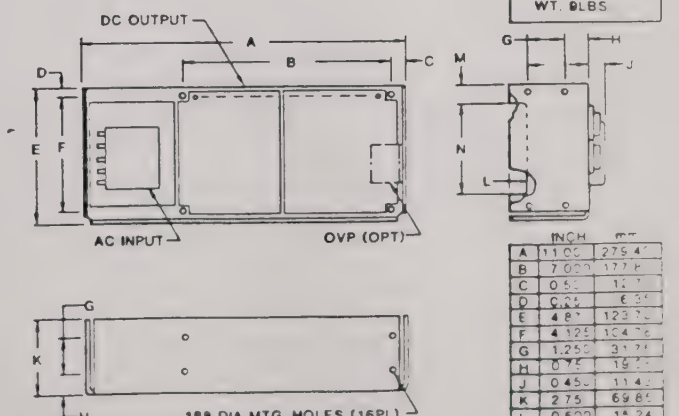

	INCH	mm
A	11.00	279.40
B	7.000	177.8
C	0.5	12.7
D	0.25	6.35
E	4.87	123.70
F	4.125	104.78
G	1.250	31.75
H	0.75	19.05
J	0.450	11.43
K	2.75	69.85
L	0.600	15.24
M	0.642	16.31
N	3.35	85.09

FUSE AT: 3.0/1.5 AMPS FOR 100-120/220-240 VAC

REV	F
DWG NO.	D 07775-XX

BRANSON INTERNATIONAL PLASMA CORPORATION

ENGINEERING PARTS LIST

07775-02	NEW VERSION
07775	OBSOLETE
PART No.	DESCRIPTION

REV	DESCRIPTION	DATE	CHK	APPR
F	CORRECT ERROR IN DWG /EO# 741	1.11.85	AWL	
	[illegible] P/N WAS -4702-0395	[illegible]		
	[illegible]	[illegible]		
L	ADD DIODE CR-120, MAKE DCV. -02 VERSION EO 583 CKS	10.24.84		
C	PWA REMOVED E.O. #473	1.21.84		
B	PWA ADDED, P/N [illegible] WAS 240 ohm EO# 291	5.2.84		
A	RELEASED E.O. #11965 BJ	5-13-83		
-	REVISED PRELIMINARY BJ	3-8-83		
1	PRELIMINARY BJ	4-82		

REVISION LEVEL

A 07775

A [illegible]

E 10452

NEXT ASSY

BRANSON/IPC
a SmithKline company

31172 HUNTWOOD AVE
HAYWARD, CALIFORNIA
94544

TITLE: VACUUM METER AND CONTROL BOARD ASSEMBLY

SIZE	DWG. NO	REV	CHK	APPR
D	07775-XX	F		

DRAWN	DATE
B. J.	5/12/82

A05495 REV B

ENGINEERING PARTS LIST -02

REF. NO.	DESCRIPTION	PART NO.	QTY.
3	HEATSINK	B 04485	1
2	REGULATOR BOARD	C 06512	1
	SCHEMATIC	C 10454	REF
C406	CAPACITOR, CERAMIC DISC, .01 uF 500 V	1500-0001	1
C405, 409, 410, 411	CAPACITOR, 22 uF 16 V	1500-0011	4
C404, 407	CAPACITOR, CERAMIC DISC, .1 uF 25 V	1500-0026	2
C408, C401	CAPACITOR, CERAMIC DISC, .001 uF 1000 V	1500-0032	2
C402, 403	CAPACITOR, .05 uF 500 V	1500-0210	2
L401,402 403, 404	CHOKE, 39 uH	1800-0012	4
1	IC SOCKET 14 PIN	2110-0001	2
K401	RELAY, DIP REED	4500-0177	1
10,	RESISTOR, CARBON 1K 1/4 W	4702-0102	1
R401, 403	RESISTOR, CARBON 10K 1/4 W	4702-0103	2
R402	RESISTOR, CARBON 22K, 1/4W	4702-0223	1
R417	RESISTOR, CARBON 240 ohm 1 W	4704-0241	1
R406, 412	RESISTOR, CARBON 3.3 K 1/4 W	4702-0332	2
R404, 415	RESISTOR, CARBON 390K 1/4 W	4702-0394	2
R405, 411, 416	RESISTOR, CARBON 4.7K 1/4 W	4702-0472	3
R408, 409	RESISTOR, CARBON 680 ohm 1/4 W	4702-0681	2
R414	POTENTIOMETER 1K	4750-0021	1

BRANSON/IPC
a SmithKline company
31172 HUNTWOOD AVE
HAYWARD, CALIFORNIA
94544

TITLE: VACUUM METER AND CONTROL BOARD ASSEMBLY

SIZE	DWG. NO	REV	CHK	APPR
D	07775-XX	F		

DRAWN	DATE	SHEET
B.J.	5/12/82	2 OF 3

08456 - 16E

A04289 REV B

ENGINEERING PARTS LIST -02

REF. NO.	DESCRIPTION	PART NO.	QTY.
, 402	OPERATIONAL AMPLIFIER	4800-0012	2
Q401	TRANSISTOR - 2N 5657 - MOTOROLA	4800-0024	1
Q402	TRANSISTOR - 2N4921 - MOTOROLA	4800-0047	1
CR 417	DIODE	4800-0045	1
CR 418,419	DIODE ZENER IN5245	4800-1031	2
CR420	DIODE, ZENER IN4742A 12V, 1W	4800-0053	1
T401	AUDIO TRANSFORMER	5600-0014	1

BRANSON/IPC
a SmithKline company
31172 HUNTWOOD AVE
HAYWARD, CALIFORNIA
94544

TITLE: VACUUM METER AND CONTROL BOARD ASSEMBLY

SIZE	DWG. NO	REV	CHK	APPR
D	07775-XX	F		

DRAWN	DATE	SHEET
B.J.	5/12/82	3 OF 3

REV	C
DWG NO.	A 07788

BRANSON INTERNATIONAL PLASMA CORPORATION

ENGINEERING PARTS LIST

07788
PART NO

REV	DESCRIPTION		DATE	CHK	APPR
C	E.O. 724		1-17-85		
A	RELEASED E.O. #11965	BJ	5-13-83	CC	
5	REVISED	BJ	1-25-83		
4	REVISED PRELIMINARY	BJ	7-29-82		
3	REVISED PRELIMINARY	BJ	5-82		
2	REVISED	EA	11-81		
1	PRELINARY	EM	11-81		

REVISION LEVEL

A 10373

NEXT ASSY.

BRANSON/IPC
a SmithKline company

31172 HUNTWOOD AVE
HAYWARD, CALIFORNIA
94544

TITLE
PLUMBING KIT CONTROLLER 2000C
ANALOG FLOWMETERS
HARD PLUMBING

SIZE	DWG. NO.	REV.	CHK.	APPR
A	07788	C		

DRAWN	DATE
B.J.	5/12/82

ENGINEERING PARTS LIST

REF. NO.	DESCRIPTION	PART NO.	QTY.
	SPACER	B12232	6
	FLOWRATOR MOUNTING BRACKET	B 04118	6
	A/C FILTERS	06555	4
	COVER	07719	1
	INSULATED CRIMP CONNECTOR FEMALE	2120-5077	8
	STANDOFF 6-32 X 1.375	2860-8257	12
	FLOWRATER S.S.	2900-0375	3
	VALVE SOLENOID 120 V	5930-0002	4
	VALVE SOLENOID 120 V	5935-0025	1
	TUBING, SS 1/4 DIA.		AR
	BULKHEAD RETAINER 1/4 TUBE	5970-0024	8
	FITTING, BRASS 1/4 T x 1/8 NPT MALE	5970-0310	2
	FITTING, BRASS, BH 1/4 T X 1/8 NPT MALE	5970-0450	1
	FITTING, BRASS BHU 1/4 T X 1/4 T	5970-0903	2
	FITTINGS, SS TEE 1/4 T	5975-0052	3
	FITTINGS, SS 1/4 T X 1/8 NPT	5975-0038	4
	FITTINGS, SS BH 1/4 T X 1/4 T	5975-0037	5
	FITTINGS, SS HEX NIPPLE 1/8 NPT	5975-0071	3
	ADAPTOR SS TUBE END 1/8 NPTM 1/4 T	5975-0105	4
	BRACKET, METER	B04356	2
	FOLLOWING PARTS GO INTO REACTOR CENTER		
	BELLOWS 1" SS	B 04616	1
	BELLOWS 3/8" SS	B 04599	3
	FITTING BHU SS 3/8 T X 3/8 T	5975-0005	1
	FITTING BHL SS BHL SS 3/8 T X 1/4 NPT FEMALE	5975-0022	1
	FITTING CN SS 1/4 T X 1/4 NPT MALE	5975-0023	1
	CAP SS 3/8 T	5975-0062	1

BRANSON/IPC
a SmithKline company

31172 HUNTWOOD AVE
HAYWARD, CALIFORNIA
94544

TITLE
PLUMBING KIT 2000C
ANALOG FLOWMETERS
HARD PLUMBING

SIZE	DWG. NO.	REV.	CHK.	APPR
A	07788	C		

DRAWN	DATE	SHEET
B.J.	5/11/82	1 OF 1

A04289 REV B

REV	C
DWG NO.	E 07690

BRANSON INTERNATIONAL PLASMA CORPORATION

ENGINEERING PARTS LIST

REV	DESCRIPTION			DATE	CHK	APPR
C	E.O. #12363	11-30-83	KL	12.01.83		
B	E.O. #12213	10-14-83	KL	10.18.83		
A	REVISED RELEASED E.O. #11965		BJ	5-13-83		
8	REVISED		BJ	3-1-83		
7	REVISED		BJ	1-20-83		
6	REVISED PRELIMINARY		BJ	12-82		
5	REVISED PRELIMINARY		BJ	7-82		
4	REVISED PRELIMINARY		BJ	5-82		
3	REVISED PRELIMINARY		EA	11-81		
2	REVISED PRELIMINARY		EA	11-81		
1	PRELIMINARY		EM	10-81		

REVISION LEVEL

A 10373

NEXT ASSY.

BRANSON/IPC
a SmithKline company

31172 HUNTWOOD AVE
HAYWARD, CALIFORNIA
94544

TITLE

ASSEMBLY, CONTROLLER 2000C
WITH ANALOG FLOWMETERS

SIZE	DWG. NO.	REV.	CHK.	APPR.
E	07690	C		

DRAWN	DATE
B.J.	5-12-82

ENGINEERING PARTS LIST

REF. NO.	DESCRIPTION	PART NO.	QTY.
	PLASTIC WINDOW	C 00972	1
	PCB 906 MOTHER	D 02884	1
	PCB 906 THUMBWHEEL	C 02888	1
	PCB 906 DISPLAY	C 02892	1
	METER BRACKET	B 04356	2
	REAR PANEL	D 10476	1
	CHASSIS PAN	D 07718	1
	GUSSET	C 07723	4
	GROUND BUSS	B 07727	1
	AC POWER SUPPLY CHASSIS	D 07729	1
	FAN MOUNTING BRACKET	B 07730	1
	AC POWER COVER TOP	C 07732	1
	VOLTAGE REGULATOR BOARD	C 07772	1
	AC POWER COVER BOTTOM	C 07784	1
	FRONT PANEL	D 07789	1
	DECAL	D 07790	1
	WIRING HARNESS D/C	E 10386	1
	WIRING HARNESS A/C	E 10387	1
	SCHEMATIC WITH TEMP. & CAPACITANCE MANOMETER	E 10436	REF
	SCHEMATIC WITH TEMP. & TC GAUGE	E 10437	REF
	CAPACITOR .1uf 400V	1500-0025	5
	CONNECTOR PCB 36 PIN, 906	2100-0002	2
	SOCKET, 8 PIN, RELAY PLUG	2110-0018	5
	CONNECTOR PCB EDGE 10 PIN	2100-0001	1

BRANSON/IPC
a SmithKline company

31172 HUNTWOOD AVE
HAYWARD, CALIFORNIA
94544

TITLE

ASSEMBLY, CONTROLLER 2000C
WITH ANALOG FLOWMETERS

SIZE	DWG. NO.	REV.	CHK.	APPR.
E	07690	C		

DRAWN	DATE	SHEET
B.J.	5-11-82	3 OF 5

ENGINEERING PARTS LIST

REF. NO.	DESCRIPTION	PART NO.	QTY.
	CONNECTOR 19 PIN FEMALE PANEL	2152-2212	1
	CONNECTOR 14 PIN MALE	2152-2215	1
	CONNECTOR 9 PIN FEMALE	2152-2220	1
	TERMINAL STRIP 10 PIN	2170-0003	1
	TERMINAL STRIP, 5 PIN	2170-0223	1
	MARKER 5 PIN	2170-0224	2
	TERMINAL STRIP JUMPER	2170-0235	6
	MARKER 10 PIN	2170-0004	2
	AUDIO ALARM	2200-0001	1
	KNOB	2400-0001	3
	FAN	2600-0182	1
	LINE FILTER 10 AMP	2700-0004	1
	CABINET BUMPERS	2800-0189	4
	TERMINAL STRIP	2860-0866	5
	STANDOFFS 6/32 x 1-3/8	2860-8257	12
	STANDOFF, CERAMIC	2860-2646	2
	LAMP, NEON AMBER 115V	3900-0001	8
	LAMP, NEON RED 115V	3900-0002	1
	SOCKET, LAMP	3900-0005	12
	CLIP, LAMP	3900-0006	12
	WASHER, LAMP	3900-0007	12
	LED AMBER 5V	3900-0101	3
	POWER SUPPLY	4000-0027	1

BRANSON/IPC
a SmithKline company

31172 HUNTWOOD AVE
HAYWARD, CALIFORNIA
94544

TITLE

ASSEMBLY, CONTROLLER 2300C
WITH ANALOG FLOWMETERS

SIZE	DWG NO.	REV	CHK.	APPR.
E	07690	C		

DRAWN	DATE	SHEET
B.J.	5-11-82	4 OF 5

ENGINEERING PARTS LIST

REF. NO.	DESCRIPTION	PART NO.	QTY.
	RELAY, 120V DPDT TIME DELAY	4500-0159	3
	RELAY, 24 VAC DPDT 2 AMP	4500-0164	1
	RELAY, 28 VDC DPDT 10 AMP	4500-0170	1
	RESISTOR 100 ohm, 1W	4704-0101	5
	POTS 100K 2W	4750-0001	3
	SWITCH PUSHBUTTON WHITE CAP	5100-0002	2
	SWITCH DPDT BAT HANDLE RED CAP	5100-0004	2
	SWITCH DP 3 POSITION	5100-0012	2
	SWITCH 3PDT	5100-0013	1
	MICROSWITCH	5100-0017	1
	SWITCH SPDT BAT HANDLE	5100-0027	9
	SWITCH PUSH BUTTON DPDT WHITE CAP	5100-0035	1
	FUSE 3A	5150-0421	1
	FUSE HOLDER	5150-2516	1
	TRANSFORMER 24V	5600-0006	1
	LABEL PATENT	6100-0011	1
	LABEL APPROVED GASES	6100-0018	1

BRANSON/IPC
a SmithKline company

31172 HUNTWOOD AVE
HAYWARD, CALIFORNIA
94544

TITLE

ASSEMBLY, CONTROLLER
WITH ANALOG FLOWMETERS

SIZE	DWG. NO.	REV.	CHK.	APPR.
E	07690	C		

DRAWN	DATE	SHEET
B.J.	5-11-82	5 OF 5

A04289 REV B

REV	B
DWG NO.	A 07772

BRANSON INTERNATIONAL PLASMA CORPORATION

ENGINEERING PARTS LIST

REV	DESCRIPTION		DATE	CHK	APPR
B	E.O. #12216	10-18-83 KG	10.26.83		
A	RELEASED E.O. #11965	BJ	5-13-83		
4	REVISED	BJ	4-13-83		
3	REVISED	BJ	2-28-83		
2	REVISED PRELIMINARY	BJ	1-31-83		
1	PRELIMINARY	BJ	4-19-82		

REVISION LEVEL

NEXT ASSY
E 10452
E 07690
E 10462
E 10453

BRANSON/IPC
a SmithKline company

31172 HUNTWOOD AVE
HAYWARD, CALIFORNIA
94544

TITLE: VOLTAGE REGULATOR BOARD

SIZE	DWG. NO.	REV.	CHK.	APPR.
C	07772	B		

DRAWN	DATE
B.J.	4-19-82

ENGINEERING PARTS LIST

REF. NO.	DESCRIPTION	PART NO.	QTY.
1	HEATSINK	04485	2
2	± 12V REGULATOR BOARD	B 12086	1
	SCHEMATIC	C 07785	REF
C1,C2	CAPACITOR 22 uf 16V	1500-0011	2
C3,C4	CAPACITOR .1 uf 20V	1500-0026	2
3	VECTOR BOARD TERMINALS	2160-0001	11
R1,R2	RESISTOR 33K, 1/4W, 5%	4702-0333	2
R3,R4	POTENTIOMETER 10K	4750-0013	2
VR1	VOLTAGE REGULATOR 7812	4800-0221	1
VR2	VOLTAGE REGULATOR 7912	4800-0223	1
	SCREW, NYLON, 4-40 x 1/2" L		2
	NUT, NYLON, 4-40		2
	#4 FIBER WASHER		2

BRANSON/IPC
a SmithKline company
31172 HUNTWOOD AVE
HAYWARD, CALIFORNIA
94544

TITLE: ASSEMBLY, ± 12 V REGULATOR BOARD

SIZE	DWG. NO.	REV.	CHK.	APPR.
C	07772	B		

DRAWN	DATE	SHEET
B. J.	4-19-82	2 OF 2

REV	N
DWG NO.	D 02908-XX

BRANSON INTERNATIONAL PLASMA CORPORATION

ENGINEERING PARTS LIST

02908-02	USE ON DOWNSIZE +
02908	USE REG VERSION
PART NO.	DESCRIPTION

REV	DESCRIPTION	DATE	CHK	APPR
N	E0927 IN NOTE 6 P101-2 WAS P101 ROC	4.28.85		
M	RECORD CHANGE EO# 805	2.25.85		
M	JUMPER RELOCATED EO# 805	2.25.85		
L	ADD -02 VERSION PER E.O. #510			
K	REVISED BY E.O. # 12090 PD	08-15-83		
J	REVISED PER E.O. #11404 JD	10-18-82		

REVISION LEVEL

NEXT ASSY.

BRANSON/IPC

31172 HUNTWOOD AVE
HAYWARD, CALIFORNIA
94544

TITLE: MOTHER BOARD ASSEMBLY
TEMPERATURE CONTROLLER

SIZE	DWG. NO.	REV.	CHK.	APPR.
D	02908-XX	N		

DRAWN	DATE
J.B.	11-27-78

A05495 REV. B

ENGINEERING PARTS LIST

QTY

REF. NO.	DESCRIPTION	PART NO.	-	02
1	P.C. BOARD BLANK	D 02906	1	1
C101,102 C104,109 C111,112 C115-119	CAPACITOR, DC, 500V, .01mFd, SPRAGUE #5GAS-S10	1500-0001	11	11
C120	CAPACITOR, 18 mF, SIEMENS #B0320541-011851250	1500-0006	1	1
C107,108 C110	CAPACITOR, .1mF, 400V FOIL +10%, SPRAGUE #4PS-P10	1500-0025	3	3
C121	CAPACITOR, .1mF 20V, CENTRALAB #UK20-104	1500-0026	1	1
C106	CAPACITOR, .001 mF, 1 KVDC, SPRAGUE #5GA-D10	1500-0032	1	1
C113,114	CAPACITOR, ELECT. 2000mF 25VDC, SPRAGUE #TVA-1213	1500-0208	2	0
C103	CAPACITOR, .47mF 200VDC FOIL +10%, SPRAGUE #2PS-P47	1500-0211	1	1
C105	CAPACITOR, .02mF 500VDC, SPRAGUE #5GAS-S20	1500-0213	1	1
J201,202	P.C. EDGE CONNECTOR, CINCH JONES #50-36B-10	2100-0189	2	2
2	IC SOCKETS, 14 PIN, AMPHENOL #821-20011-144	2110-0001	23	23
3	IC SOCKETS, 16 PIN, AMPHENOL #821-20011-164	2110-0002	3	3
R107	RESISTOR, METAL FILM, 1-2%, 1/4W, 100 OHMS	4602-0101	1	1
R108	RESISTOR, METAL FILM, 1-2%, 1/4W, 1.2K OHMS	4602-0122	1	1
R128	RESISTOR, METAL FILM, 1-2%, 1/4W, 1.6K OHMS	4602-0162	1	1
R110	RESISTOR, METAL FILM, 1-2%, 1/4W, 30K OHMS	4602-0303	1	1
R112	RESISTOR, METAL FILM, 2%, 1/4W, 5.1K OHMS	4602-0512	1	1
R129,134	RESISTOR, CARBON COMP. 1/4W, 1K OHMS	4702-0102	2	2
R103,113	RESISTOR, CARBON COMP. 1/4W, 10K OHMS	4702-0103	2	2
R122,126 R127	RESISTOR, CARBON COMP. 1/4W, 200 OHMS	4702-0201	3	7
R104,115 R116,119 R120,124	RESISTOR, CARBON COMP. 1/4W, 2K OHMS	4702-0202	6	6
R125,131 R118,121	RESISTOR, CARBON COMP. 1/4W, 2.7K OHMS	4702-0272	4	4

BRANSON/IPC

31172 HUNTWOOD AVE
HAYWARD, CALIFORNIA
94544

TITLE: MOTHER BOARD ASSEMBLY
TEMPERATURE CONTROLLER

SIZE	DWG. NO.	REV.	CHK.	APPR.
D	02908 -XX	N		

DRAWN	DATE	SHEET
UB	11-17-78	2 OF 3

ENGINEERING PARTS LIST

REF. NO.	DESCRIPTION	PART NO.	QTY -	QTY 02
R102,114 R123,130	RESISTOR, CARBON COMP. 1/4W, 470 OHMS	4702-0471	4	4
R105,117 R133	RESISTOR, CARBON COMP. 1/4W, 5.6K OHMS	4702-0562	3	3
R132	RESISTOR, CARBON COMP, 1/2W, 22 OHMS	4703-0220	1	1
R111	POTENTIOMETER, 50K OHMS, BOURNES #3069P-1-503	4750-0012	1	1
R106	POTENTIOMETER, 10K OHMS, BOURNES #3069P-1-103	4750-0013	1	1
R109	POTENTIOMETER, 500 OHMS, BOURNES #3069P-1-501	4750-0966	1	1
U113,121	OPERATIONAL AMPLIFIER, FAIRCHILD #MA747	4800-0012	2	2
CR105	RECTIFIER BRIDGE, QUAD INT'L #18DB2A	4800-0044	1	0
CR101-103	DIODE, MOTOROLA #IN4151	4800-0045	3	3
Q101	TRANSISTOR, MOTOROLA #2N4918	4800-0046	1	1
Q102	TRANSISTOR, MOTOROLA #2N4921	4800-0047	1	1
U117,120 U125,126	2 INPUT NAND, TEXAS INSTRUMENTS #SN7400N	4800-0103	4	4
U101-103	2 INPUT NAND, OPEN CO., TEXAS INSTRUMENTS #SN7403N	4800-0104	3	3
U105,114 U115,124	J-K FLIP-FLOP, TEXAS INSTRUMENTS #SN74H103N	4800-0106	4	4
U106,107	BINARY COUNTERS/LATCHES, TEXAS INSTRUMENTS #SN74176N	4800-0107	2	2
U104,112 U118,123	HEX INVERTER, TEXAS INSTRUMENTS #SN7404N	4800-0114	4	4
U111	AN-OR-INVERT GATE, TEXAS INSTRUMENTS #SN74S64N	4800-0115	1	1
U116	BINARY COUNTERS/LATCHES, TEXAS INSTRUMENTS #SN74177N	4800-0116	1	1
U108-110	BI-STABLE LATCH, TEXAS INSTRUMENTS #SN7475N	4800-0117	3	3
U119	3 INPUT NAND, TEXAS INSTRUMENTS #SN7410N	4800-0118	1	1
U122	DUAL FET SWITCH, SILICONEX #DG2008P	4800-0120	1	1
T101	TRANSFORMER, SIGNAL #241-4-20	5600-0006	1	0
	SCHEMATIC, PM 921	D 02905	REF	
	SCHEMATIC, PM 923	D 04532	REF	

BRANSON/IPC

31172 HUNTWOOD AVE
HAYWARD, CALIFORNIA
94544

TITLE: MOTHER BOARD ASSEMBLY
TEMPERATURE CONTROLLER

SIZE	DWG. NO.	REV.	CHK.	APPR.
D	02908 -XX	N		JCO

DRAWN	DATE	SHEET
JB	11-27-78	3 OF 3

REV	A
DWG NO.	A10384

BRANSON INTERNATIONAL PLASMA CORPORATION

ENGINEERING PARTS LIST

REV	DESCRIPTION		DATE	CHK	APPR
A	REVISED RELEASED E.O. #11965	BJ	5-13-83	CC	BJ
3	REVISED	BJ	3-1-83		
2	REVISED PRELIMINARY	BJ	7-29-82		
1	PRELIMINARY	BJ	4-82		

REVISION LEVEL

A 10373

NEXT ASSY.

BRANSON/IPC
a SmithKline company

31172 HUNTWOOD AVE
HAYWARD, CALIFORNIA
94544

TITLE
TEMPERATURE CONTROLLER KIT
COMPACT REACTOR CENTER

SIZE	DWG. NO.	REV.	CHK.	APPR.
A	10384	A		

DRAWN	DATE
B. J.	4-19-82

ENGINEERING PARTS LIST

REF. NO.	DESCRIPTION	PART NO.	QTY.
	PLASTIC WINDOW	C 00972	1
	SCHEMATIC DIAGRAM	D 02905	REF
	921 MOTHER BOARD	D 02908	1
	921 DISPLAY BOARD	C 02912	1
	921 THUMBWHEEL BOARD	C 02916	1
	TEMPERATURE PROBE	C 02973	1
	PROBE MOUNTING BRACKET	B 03020	1
	PROBE MOUNTING CLAMP	B 04429	1
	PROBE SHEATH	C 04452	1
	MOUNTING BRACKET PCB	B 07712	2
	MOUNTING BRACKET FOOT	B 07713	2
	MOUNTING BRACKET ANGLE	C 07714	2
	HARNESS DC	C 10389	1
	STANDOFFS 6-32 x 1.250	2860-6324	4
	STANDOFFS 6-32 x .500	2860-8241	2
	STANDOFFS 6-32 x 1.375	2860-8257	1

BRANSON/IPC
a SmithKline company

31172 HUNTWOOD AVE
HAYWARD, CALIFORNIA
94544

TITLE

COMPACT R/C
TEMPERATURE CONTROLLER KIT

SIZE	DWG. NO.	REV.	CHK.	APPR.
A	10384	A		

DRAWN	DATE	SHEET
B. J.	2-28-83	1OF 1

ENGINEERING PARTS LIST

O

REF. NO.	DESCRIPTION	PART NO.	QTY.
1	P.C. CARD, BLANK	C 02910	1
2	IC SOCKET, 16 PIN	2110-0002	3
R201-221	RESISTOR, ¼W 100 ohms	4702-0101	21
U201-203	BCD TO 7 SEGMENT DECODER/DRIVER	4800-0112	3
	TI #7447A		
U204-206	7 SEGMENT DISPLAY .065 Hi	4800-0113	3
	LITRONIX #DL 747		

INTERNATIONAL PLASMA CORPORATION
31159 SAN BENITO
HAYWARD, CALIF.
94544

TITLE A-3 DISPLAY CARD
TEMPERATURE CONTROLLER

SIZE	DWG. NO.	REV.	CHK.	APPR.
B	02912	A		

DRAWN	DATE	SHEET 2 OF 2
SS-ck	7-13-78	

REV	E
DWG NO.	A 10372

BRANSON INTERNATIONAL PLASMA CORPORATION

ENGINEERING PARTS LIST

10372
PART NUMBER

REV	DESCRIPTION		DATE	CHK	APPR
E	P/N #13128-01 WAS A06041 EO#991		5.31.85	[illegible]	[illegible]
D	P/N D12164-02 WAS D07703 EO#757		11.8.85	[illegible]	[illegible]
C	P/N 12253-01 ADDED / EO614			11/5	[illegible]
B	750-12494-01 ADDED / EO 573		11/6/84		[illegible]
A	REVISED RELEASED E.O. #11965	BJ	5-13-83	CC	[illegible]
2	REVISED PRELIMINARY	BJ	2-1-83	BJ	
1	PRELIMINARY	BJ	4-82		

REVISION LEVEL

NEXT ASSY.
A 10373
A 10374
A 10375

BRANSON/IPC

31172 HUNTWOOD AVE
HAYWARD, CALIFORNIA
94544

TITLE: 11020 REACTOR CENTER ASSEMBLY

SIZE	DWG. NO.	REV.	CHK.	APPR.
A	10372	E		

DRAWN	DATE
B. J.	4-19-82

A05495 REV. B

ENGINEERING PARTS LIST

REF. NO.	DESCRIPTION	PART NO.	QTY.
	AC POWER CABLE	B 02349-005	1
	OUTLET FLANGE	B 02596	1
	SCREEN FAN	B 02799	2
	INDUCTOR, 6-1/2 TURNS	C 02824	1
	WINDOW STOP	A 03162	4
	DOOR TENSION SPRING	B 03752	2
	FOOT SUPPORT	B 03931	4
	ELECTRODE SUPPORT	B 03933	4
	HANGER BRACKET	B 03934	4
	RF SHIELD, DOOR	C12253-01	1
	SLIDE WINDOW TEFLON	C 04224	1
	BASE PLATE MTG BRACKET AUTOMATCH	B 04418	1
	BRACKET CAPACITOR MOUNTING	B 04426	2
	CUP JOINT EXHAUST GAS	B 10465	1
	INDUCTOR, 4-1/2 TURNS	C 04462	1
	INDUCTOR, 5-1/2 TURNS	C 04463	1
	WINDOW 10" REACTOR CENTER	C 04480	1
	TEFLON PAD	C 04625	1
	SHORTING PLUG	B 04340	1
	10" x 20" CHAMBER	E 05361	1
	ACORN NUT	B 05754	6
	SHIPPING KIT	13128-01	1
	CLAMP HOOK	B 06177	2
	BOLT MODIFIED	A 06523	1
	NUT MODIFIED	A 06524	1
	DOOR HANDLE MODIFIED	A 06525	1
	STRIKER RIGHT	B 06543	1

BRANSON/IPC

31172 HUNTWOOD AVE
HAYWARD, CALIFORNIA
94544

TITLE

ASSEMBLY
11020 REACTOR CENTER

SIZE	DWG. NO.	REV.	CHK.	APPR.
A	10372	E		

DRAWN	DATE	SHEET
B. J.	4-19-82	1 OF 3

A04289 REV B

ENGINEERING PARTS LIST

REF. NO.	DESCRIPTION	PART NO.	QTY.
	AUTOMATCH PM 702-A	D 07694	1
	FRONT PANEL	D 07697	1
	GUSSET WALL	C 07698	2
	DECK ASSEMBLY	E 07701	1
	DPS HOUSING REAR ANGLE	D 07702	1
	DOOR, RC 10" & 12", BLUE-BLACK	12164-02	1
	INSULATOR SUPPORT	B 07705	8
	DOOR HINGE	C 07706	1
	FOOT SUPPORT 45°	B 07707	4
	REAR PANEL	D 07708	1
	COVER	E 07720	1
	COVER STIFFENER REAR	C 07721	1
	SWITCH BLOCK	B 07722	1
	DPS HOUSING COVER	C 07725	1
	DOOR STOP	B 07731	1
	CONNECTOR PLATE ELECTRODE	D 07733	1
	CONDUIT	C 07726	2
	SUB CHASSIS COVER	B 09747	2
	MODESTY PLATE	C 09749	1
	REAR PANEL ACCESS	C 09750	1
	INNER DOOR PLATE	D 09751	1
	CHAMBER RETAINER 10" REACTOR	D 09752	1
	ELECTRODE ASSEMBLY 10"	D 09753	4
	SUB CHASSIS	D 09754	1
	GAS BALL QUARTZ	B 09755	1
	STRAP, RF CONDUCTOR	750-12494-01	1
	HORIZONTAL BAR	D 10427	2
	HOT ELECTRODE PLATE	D 10479	1
	SCHEMATIC 2000C	D 10455	REF
	SCHEMATIC 4000C and 3000C	D 10456	REF

BRANSON/IPC

31172 HUNTWOOD AVE
HAYWARD, CALIFORNIA
94544

TITLE

ASSEMBLY
11020 REACTOR CENTER

SIZE	DWG. NO.	REV.	CHK.	APPR.
A	10372	E		

DRAWN	DATE	SHEET
B. J.	4-19-82	2 OF 3

ENGINEERING PARTS LIST

REF. NO.	DESCRIPTION	PART NO.	QTY.
	CAPACITOR TUBULAR 100 pf	1500-0189	4
	SOCKET MATE-N-LOK 24-18GA.	2120-0701	10
	CONNECTOR 9 PIN MALE	2152-2221	1
	CONNECTOR 19 PIN MALE	2152-2211	1
	TERMINAL STRIP 10 PIN	2170-0003	1
	MARKER	2170-0004	2
	CONNECTOR MATE-N-LOK 4 CIRCUIT	2180-0189	1
	CONNECTOR MATE-N-LOK 6 CIRCUIT	2180-0193	1
	FAN	2600-0004	1
	LINE FILTER	2700-0004	1
	LEVELLER SILENT	2800-0005	4
	1/2" CONDUIT CONNECTOR	2800-0086	4
	HOSE CLAMP	2800-0237	1
	STANDOFF HEX ALUM. 6-32 X 1-3/8"	2860-0020	19
	MICROSWITCH	5100-0017	2
	MAGNETIC CONTACT SET	5100-0255	2
	O-RING SIL 3/8"	5900-0012	4
	O-RING SIL 1"	5900-0120	3
	O-RING SIL 3/4"	5900-2116	3
	10" GASKET	5905-2452	1
	VALVE VACUUM PNEUMATIC	5935-0027	1
	CLAMP THOMAS	5950-0001	3
	CLAMP THOMAS	5950-0002	1
	CLAMP STAUFF	5950-0007	1
	FITTING BULKHEAD RETAINER 1/4	5970-0024	2
	FITTING BULKHEAD RETAINER 3/8"	5970-0025	2
	FITTING BULKHEAD 1/4 T x 1/4 T	5970-0903	2
	FITTING, BRASS ELBOW 1/4 T x 1/8 NPT	5970-1306	2
	CORD POWER	6000-0049	1
	LABEL	6100-0016	1

BRANSON/IPC

31172 HUNTWOOD AVE
HAYWARD, CALIFORNIA
94544

TITLE

ASSEMBLY
11020 REACTOR CENTER

SIZE	DWG. NO.	REV.	CHK.	APPR.
A	10372	E		

DRAWN	DATE	SHEET
B. J.	4-19-82	SHEET 3 OF 3

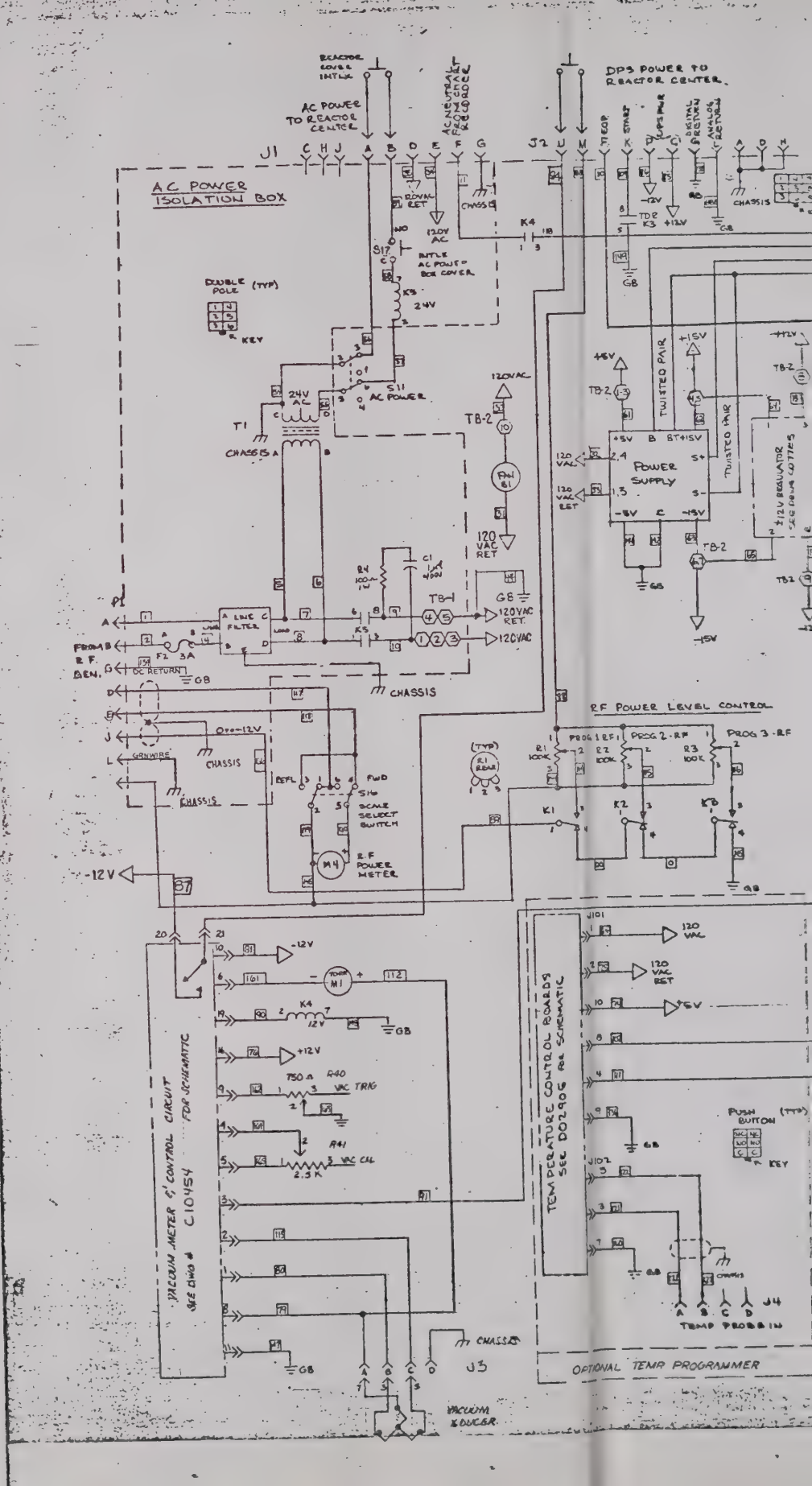

AC POWER ISOLATION BOX
AC POWER TO REACTOR CENTER
DPS POWER TO REACTOR CENTER
POWER SUPPLY
RF POWER LEVEL CONTROL
VACUUM METER & CONTROL CIRCUIT
SEE DWG # C10454 FOR SCHEMATIC
TEMPERATURE CONTROL BOARDS
SEE D02906 FOR SCHEMATIC
OPTIONAL TEMP PROGRAMMER
TEMP PROBE IN
VACUUM XDUCER
CHASSIS

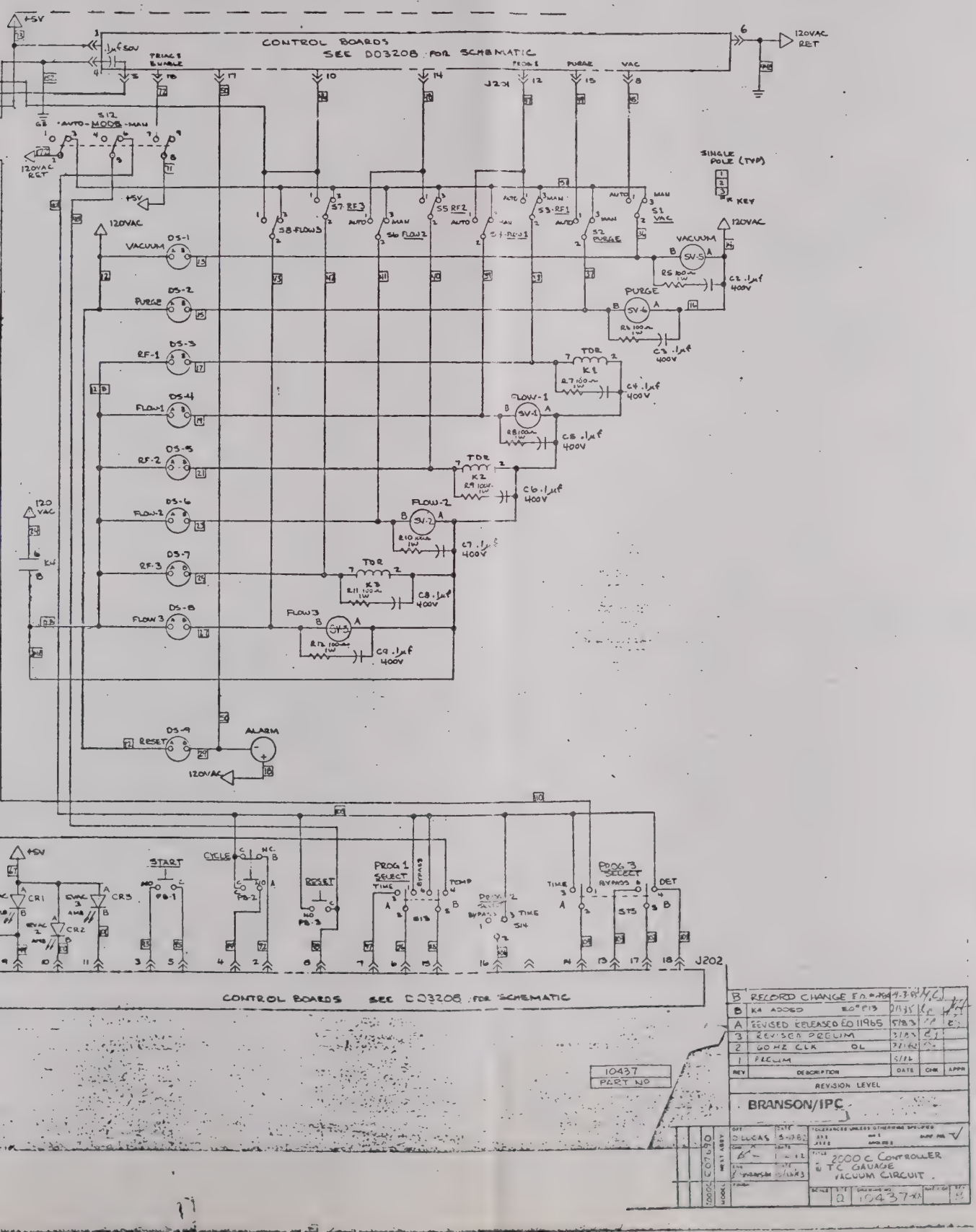
CONTROL BOARDS
SEE D03208 FOR SCHEMATIC
120VAC RET
J201
J202
SINGLE POLE (TYP)
KEY
VACUUM
PURGE
RF-1
FLOW-1
RF-2
FLOW-2
RF-3
FLOW 3
RESET
ALARM
120VAC
START
CYCLE
RESET
PROG 1 SELECT
PROG 3 SELECT
CONTROL BOARDS SEE D03208 FOR SCHEMATIC
10437
PART NO
B RECORD CHANGE
B K4 ADDED
A REVISED RELEASED EO 11965
3 REVISED PRELIM
2 60 HZ CLK OL
1 PRELIM
REV DESCRIPTION DATE CHK APPR
REVISION LEVEL
BRANSON/IPC
2000 C CONTROLLER
TC GAUAGE
VACUUM CIRCUIT
10437

NOTE: (UNLESS OTHERWISE SPECIFIED)

1. – RESISTORS ARE IN OHMS, 1/4 W, 5%
   – CAPACITORS ARE IN MICROFARADS.

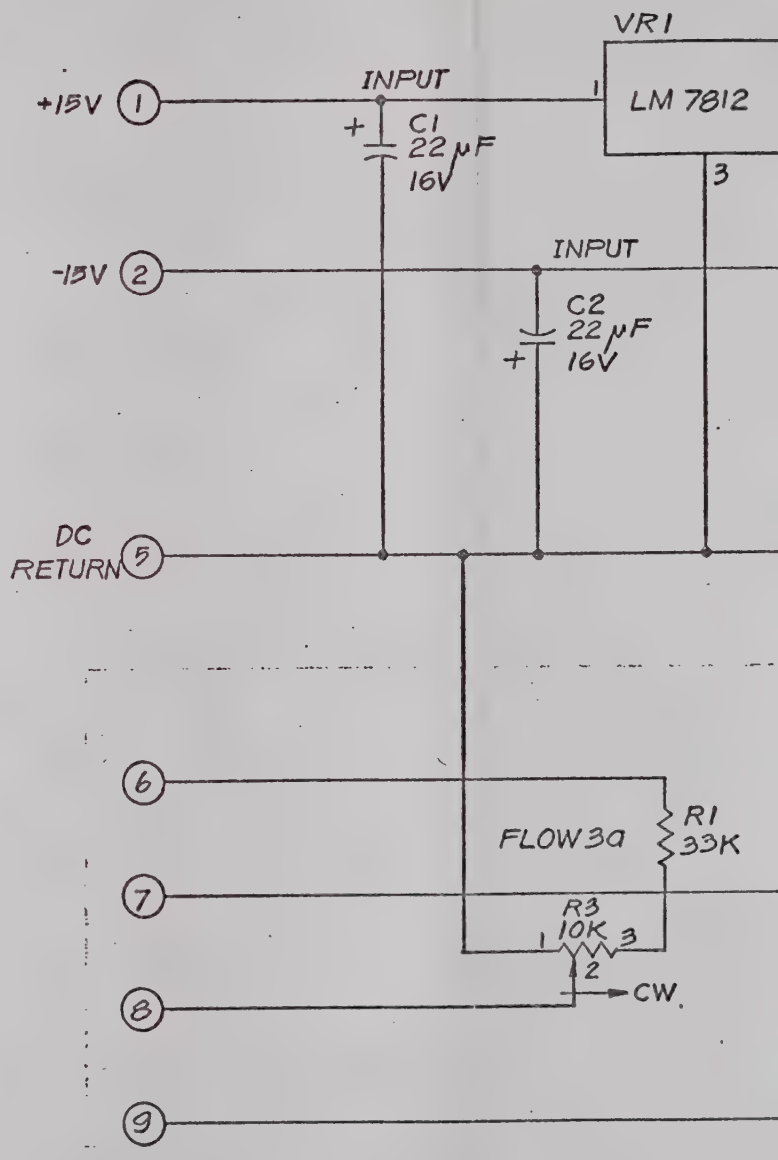

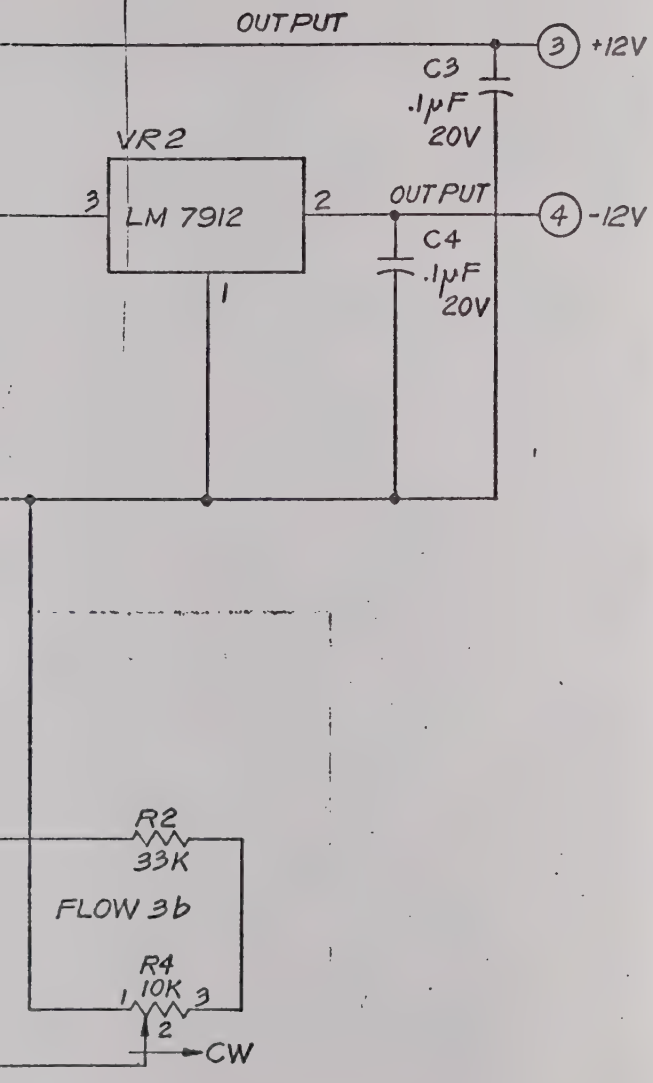

(0-5 VOLT OUTPUT - ADJUST FOR MASS FLOW CONTROLLER MODEL ONLY)

MATERIAL LIST

REF.NO.	DESCRIPTION	PART NO.	QTY.

REV	DESCRIPTION	DATE	CHK	APPR
3	REVISED E.O # 12216	12-2-13		

REVISION LEVEL

BRANSON/IPC
a SmithKline company

DFT	K. La	DATE	10-17-85
CHK		DATE	
ENG		DATE	10-23-85

TOLERANCES UNLESS OTHERWISE SPECIFIED
.XX ± ~ mm ± ~ SURF. FIN. √
.XXX ± ~ ANGLES ± ~

TITLE
SCHEMATIC,
±12V REGULATOR

SCALE	SIZE	DRAWING NO.	SHT 1 OF	REV
~	C	07785	1/1	B

07772 NEXT ASSY
MODEL FINISH

NOTE: (UNLESS OTHERWISE SPECIFIED)

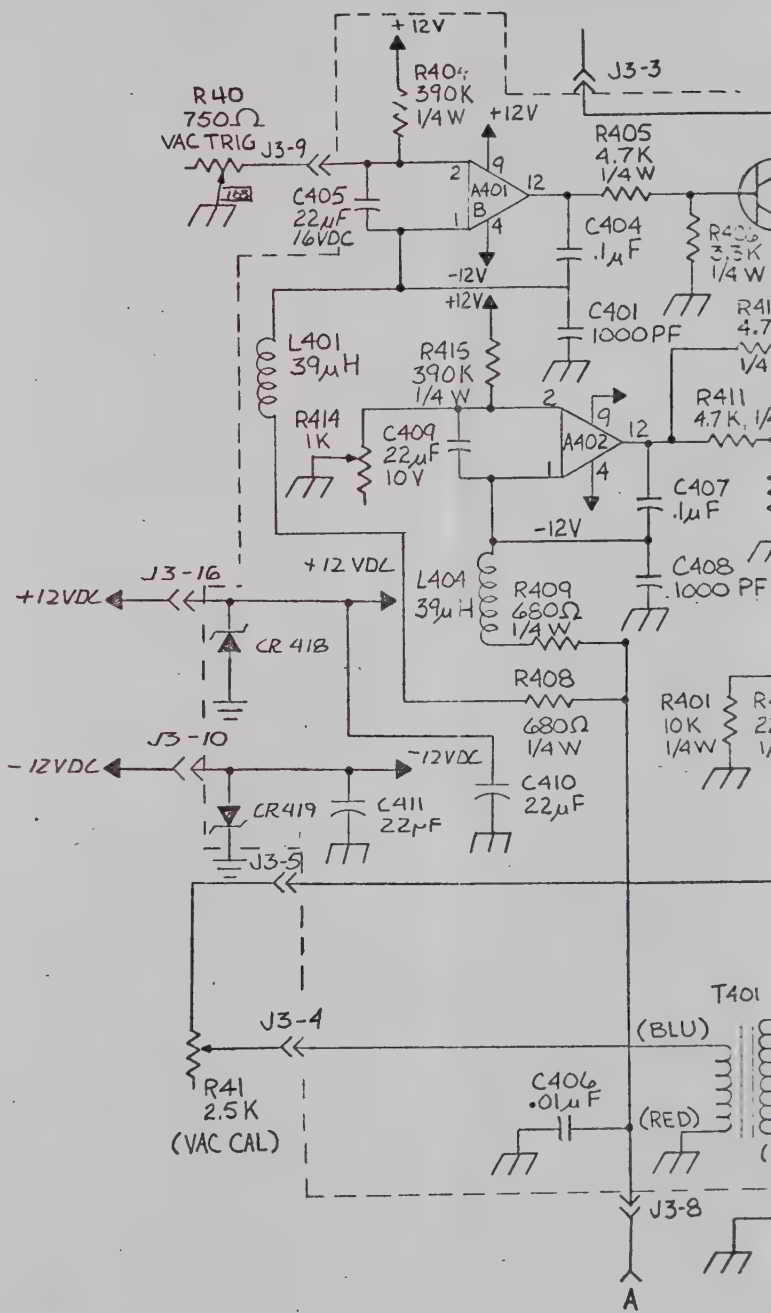

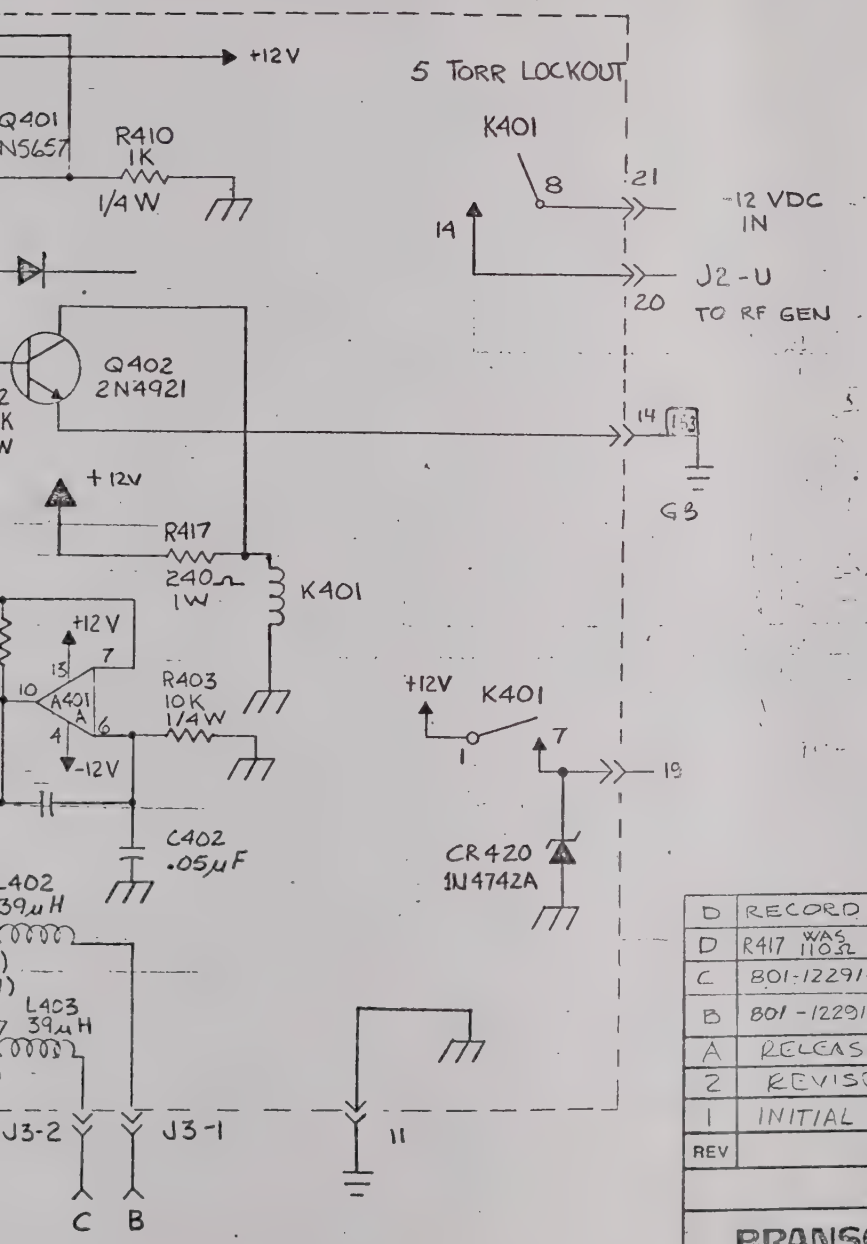

MATERIAL LIST

REF.NO.	DESCRIPTION	PART NO.	QTY.

REV	DESCRIPTION	DATE	CHK	APPR
D	RECORD CHANGE EO#744	1-17-85	[illegible]	[illegible]
D	R417 WAS 110Ω IS 240Ω ADD CR420 EO 583	10-23-84	[illegible]	[illegible]
C	801-12291-01 REMOVED E.O#473	9-21-84	[illegible]	[illegible]
B	801-12291-01 ADDED EO#291	5-21-84	[illegible]	[illegible]
A	RELEASED EO#11965	5/83	CC	[illegible]
2	REVISED	4/83		
1	INITIAL ISSUE DL	5/26/-		

REVISION LEVEL

BRANSON/IPC
a SmithKline company

DFT D.LUCAS	DATE 5/26/83	TOLERANCES UNLESS OTHERWISE SPECIFIED .XX± .XXX± mm ± ANGLES ± SURF. FIN. √
CHK	DATE	TITLE VACUUM METER & CONTROL CIRCUIT OPTION
ENG [illegible]	DATE 5/26/83	
FINISH		SCALE / SIZE C / DRAWING NO. 10454 / SHT 1 OF 1 / REV D

NEXT ASSY: A07773

MODEL

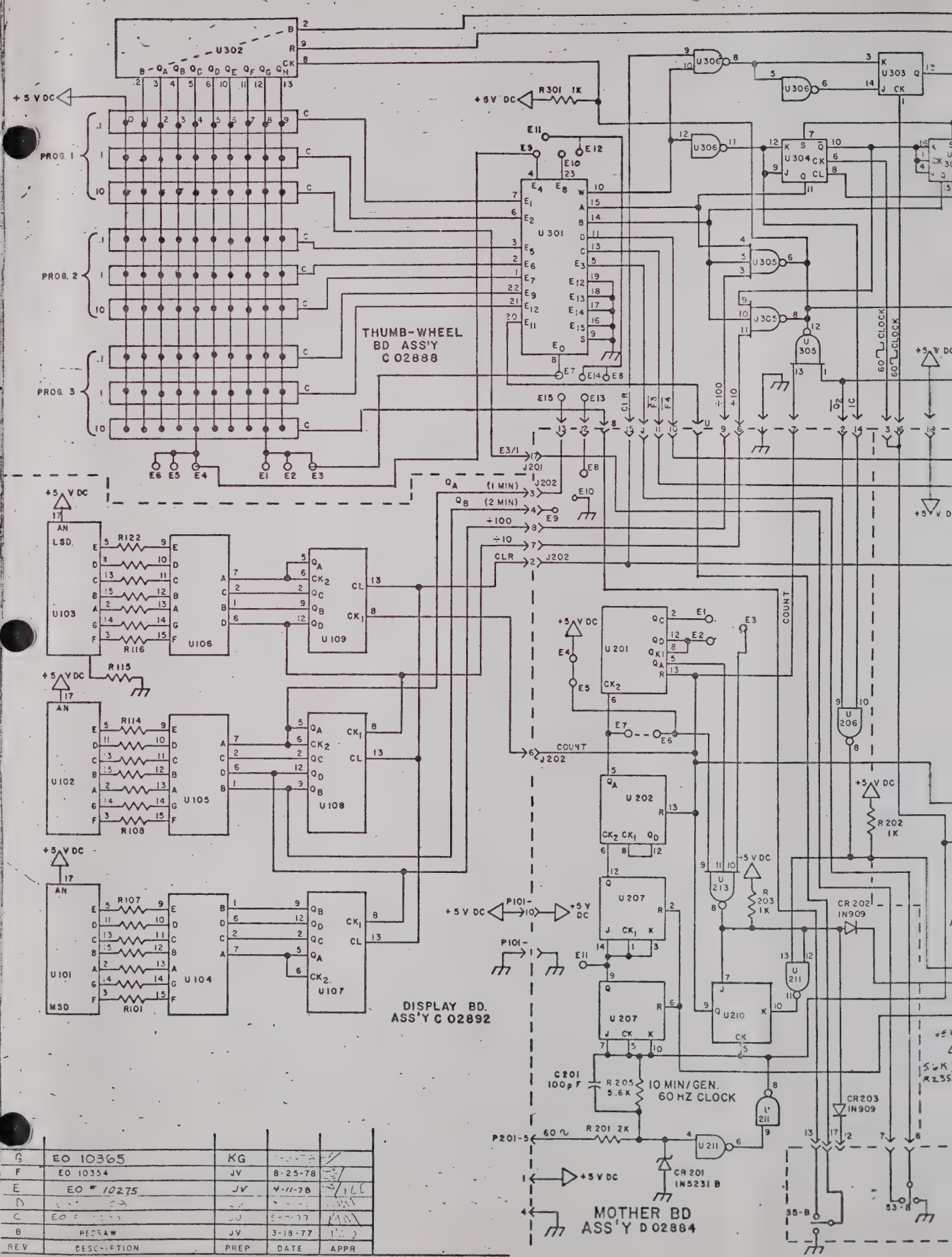

REV	DESCRIPTION	PREP	DATE	APPR
G	EO 10365	KG		
F	EO 10354	JV	8-25-78	
E	EO # 10275	JV	4-11-78	
D				
C				
B	PEGBAW	JV	3-18-77	

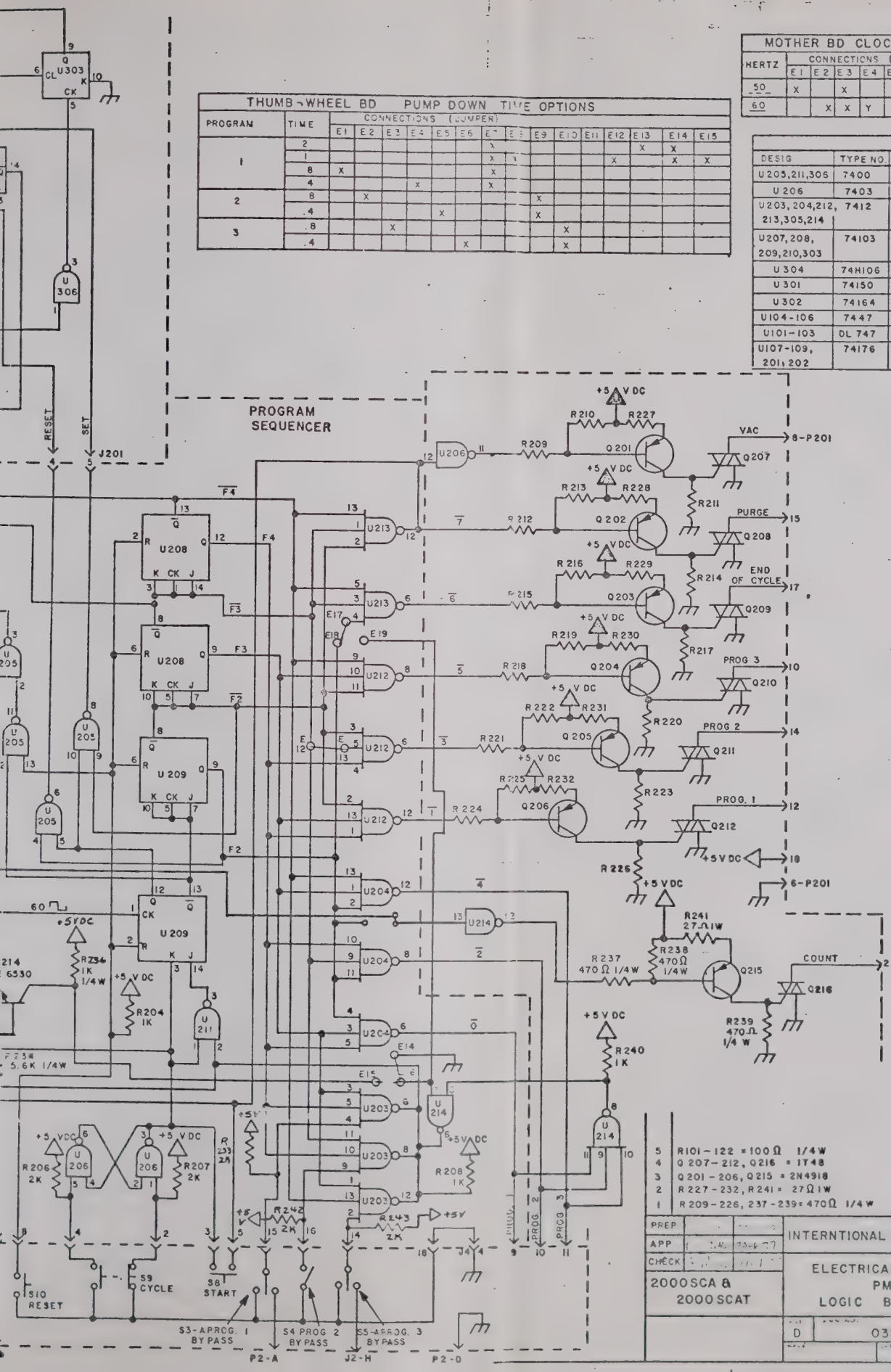

MOTHER BD CLOCK OPTION								
HERTZ	CONNECTIONS (JUMPER)							
	E1	E2	E3	E4	E5	E6	E7	
50	X		X			Y	Y	
60		X	X	Y	Y			

THUMB-WHEEL BD PUMP DOWN TIME OPTIONS																
PROGRAM	TIME	CONNECTIONS (JUMPER)														
		E1	E2	E3	E4	E5	E6	E7	E8	E9	E10	E11	E12	E13	E14	E15
1	2							X						X	X	
	1							X	X				X		X	X
	8	X						X								
	4				X			X								
2	8		X							X						
	.4					X				X						
3	.8			X							X					
	.4						X				X					

DESIG	TYPE NO.	VCC	GND
U205,211,306	7400	14	7
U206	7403	14	7
U203,204,212, 213,305,214	7412	14	7
U207,208, 209,210,303	74103	4	11
U304	74H106	5	13
U301	74150	24	12
U302	74164	14	7
U104-106	7447	16	8
U101-103	DL 747		
U107-109, 201,202	74176	14	7

5	R101-122 = 100Ω 1/4W
4	Q207-212, Q216 = 1T48
3	Q201-206, Q215 = 2N4918
2	R227-232, R241 = 27Ω 1W
1	R209-226, 237-239 = 470Ω 1/4W

PREP	INTERNTIONAL PLASMA CORP.
APP	
CHECK	ELECTRICAL SCHEMATIC PM 906 U LOGIC BOARDS
2000SCA & 2000SCAT	
D	03208 G

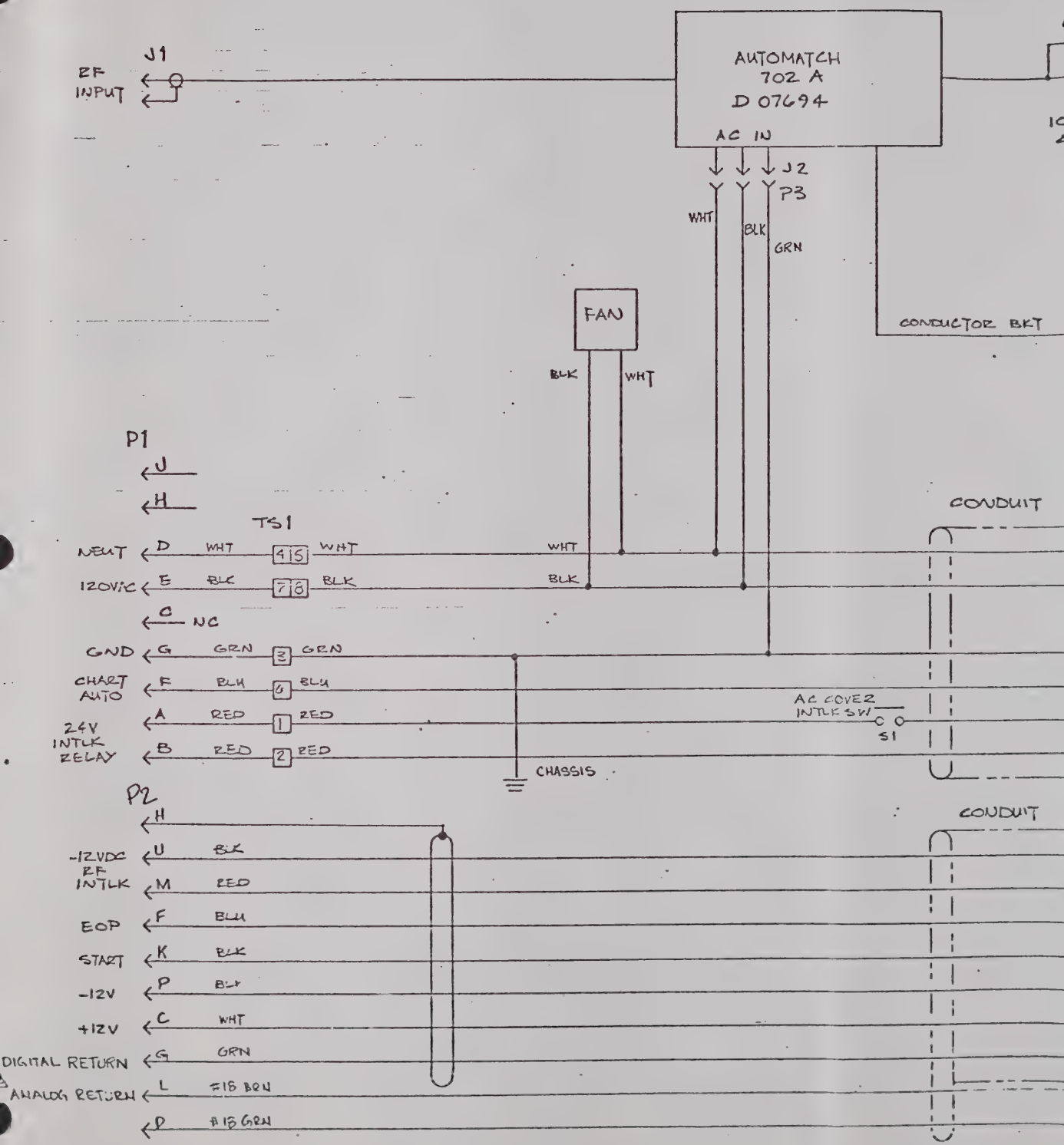
J1
RF INPUT
AUTOMATCH 702 A D 07694
AC IN
J2
P3
WHT
BLK
GRN
FAN
BLK
WHT
CONDUCTOR BKT
P1
J
H
TS1
NEUT
D
WHT
4
5
WHT
120VAC
E
BLK
7
8
BLK
C
NC
GND
G
GRN
3
GRN
CHART AUTO
F
BLK
6
BLK
24V INTLK RELAY
A
RED
1
RED
B
RED
2
RED
CONDUIT
AC COVER INTLK SW
S1
CHASSIS
P2
H
-12VDC RF INTLK
U
BLK
M
RED
EOP
F
BLU
START
K
BLK
-12V
P
BLK
+12V
C
WHT
DIGITAL RETURN
G
GRN
ANALOG RETURN
L
#18 BRN
P
#18 GRN
CONDUIT

MATERIAL LIST			
REF.NO.	DESCRIPTION	PART NO.	QTY.

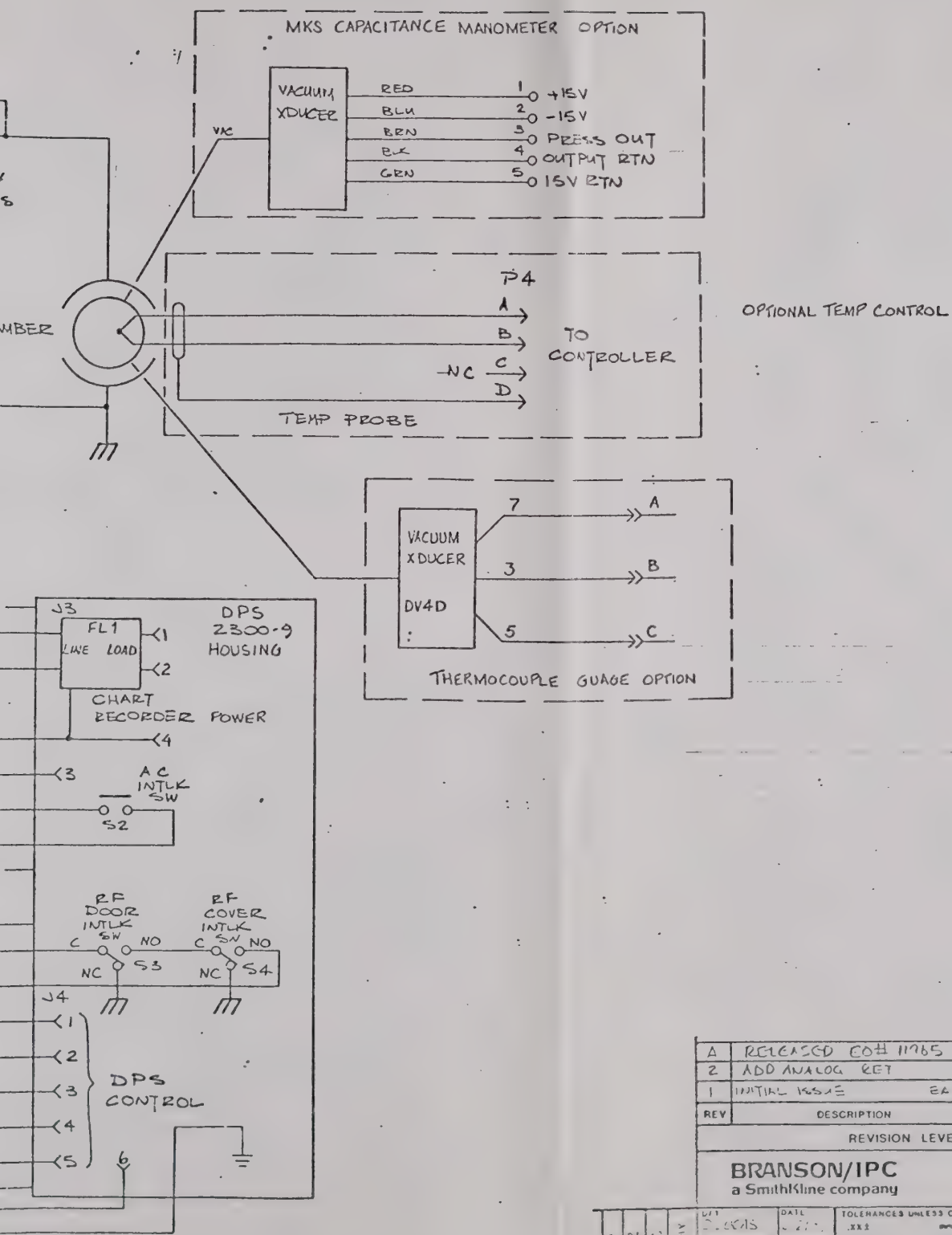

REV	DESCRIPTION	DATE	CHK	APPR
A	RELEASED EO# 11765	5/83	[illegible]	[illegible]
2	ADD ANALOG RET	2/83		
1	INITIAL ISSUE EA	[illegible]		

REVISION LEVEL

BRANSON/IPC
a SmithKline company

DFT [illegible]	DATE [illegible]	TOLERANCES UNLESS OTHERWISE SPECIFIED .XX ± .XXX ± mm ± ANGLES ± SURF. FIN. √	
CHK	DATE	TITLE SCHEMATIC COMPACT REACTOR CENTER S 2000	
ENG [illegible]	DATE 5/27/83		
FINISH		SCALE [illegible] SIZE B DRAWING NO. 10455 SHT 1 OF 1 REV A	

A10370 A10372 [illegible] NEXT ASSY

NOTE: (UNLESS OTHERWISE SPECIFIED)

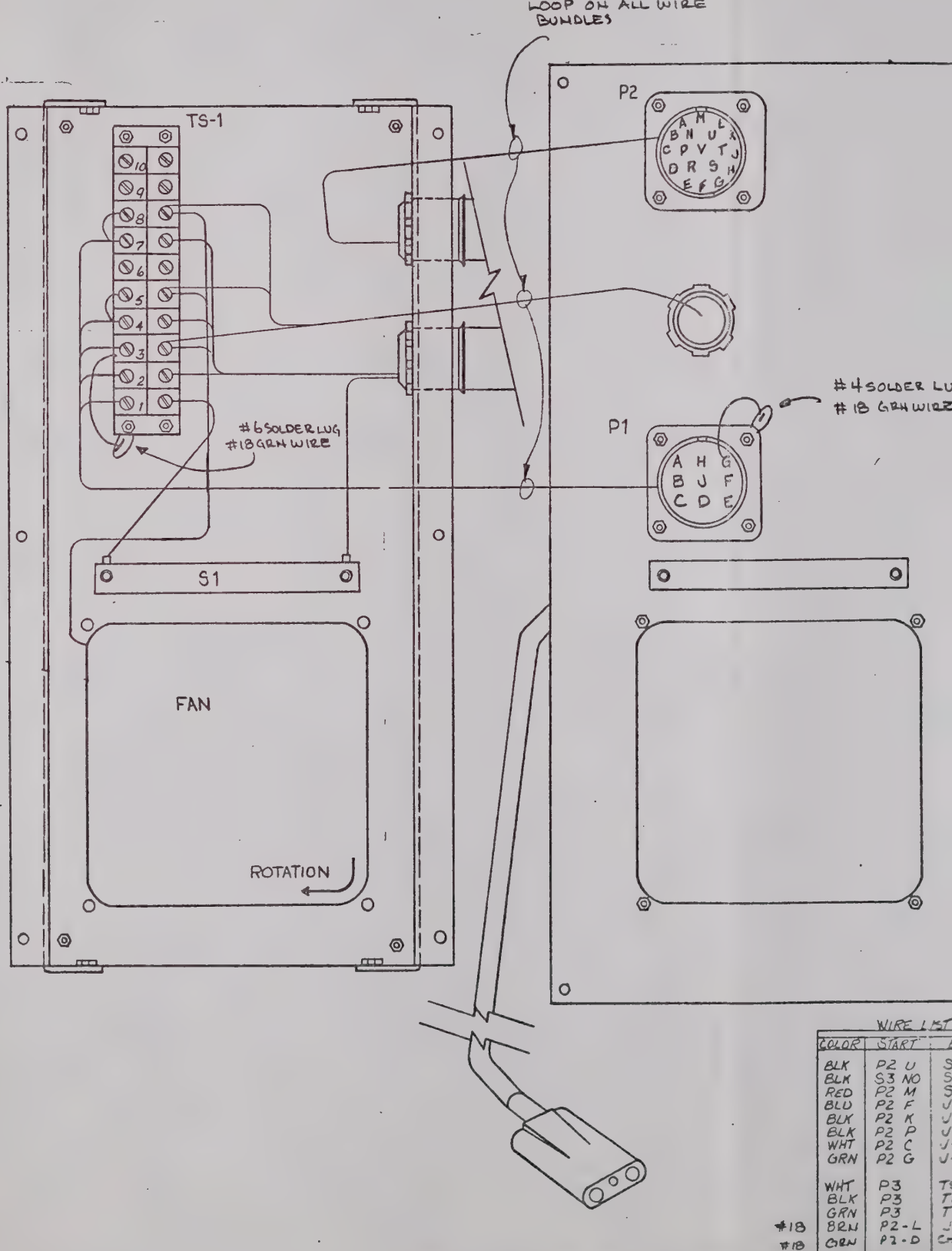

WIRE LIST

	COLOR	START
	BLK	P2 U
	BLK	S3 NO
	RED	P2 M
	BLU	P2 F
	BLK	P2 K
	BLK	P2 P
	WHT	P2 C
	GRN	P2 G
	WHT	P3
	BLK	P3
	GRN	P3
#18	BRN	P2-L
#18	GRN	P2-D

MATERIAL LIST			
REF.NO.	DESCRIPTION	PART NO.	QTY.

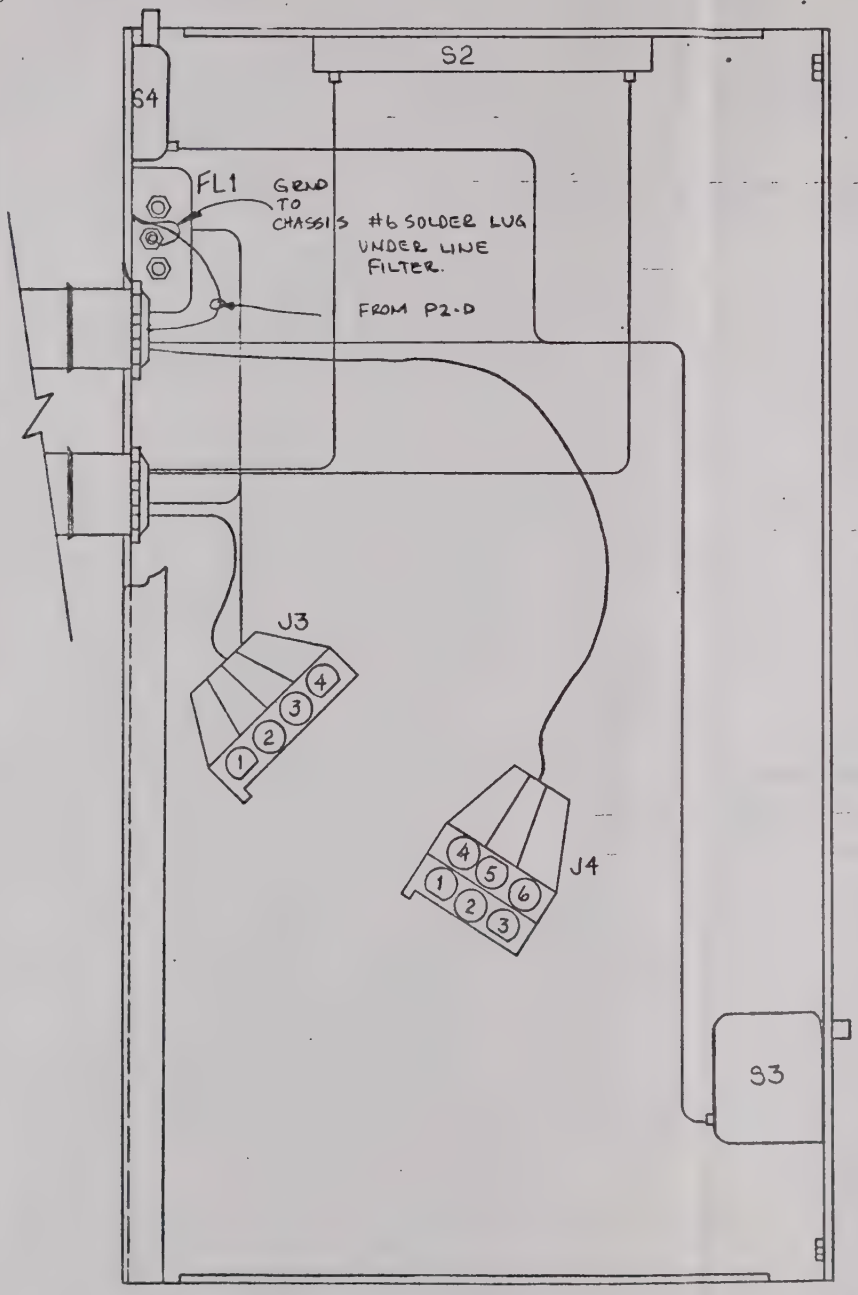

WIRE LIST

COLOR	START	END	NOTES
WHT	P1 D	TS1-4,5	
WHT	TS1-5	FAN	
WHT	TS1-4	FL1	LINE
WHT	FL1	J3-1	LOAD
BLK	P1-E	TS1-7,8	
BLK	TS1-8	FAN	
BLK	TS1-7	FL1	LINE
BLK	FL1	J3-2	LOAD
GRN	P1-G	TS1-3	
GRN	TS1-3	FL1	LINE
GRN	FL1	J3-4	
BLU	P1-F	TS1-6	
BLU	TS1-6	J3-3	
RED	P1-A	TS1-1	
RED	TS1-1	S1	
RED	S1	S2	
RED	P1-B	TS1-2	
RED	TS1-2	S2	

REV	DESCRIPTION	DATE	CHK	APPR
A	RELEASED ECO# 11985	5/13	CC	BS
2	REVISED FROM.	2/13		
1	INITIAL ISSUE CC	6/21/92		

REVISION LEVEL

BRANSON/IPC
a SmithKline company

DFT	D LUCAS	DATE 6/21/92
CHK		DATE
ENG	[illegible]	DATE 5/23/13
FINISH		

NEXT ASSY

MODEL

TOLERANCES UNLESS OTHERWISE SPECIFIED
.XX ± mm ± BURR, FSL
.XXX ± ANGLES ±

TITLE: WIRING DRAWING COMPACT REACTOR CENTER

SCALE	SIZE	DRAWING NO.	SHT / OF	REV
FULL	D	010470	1/1	A

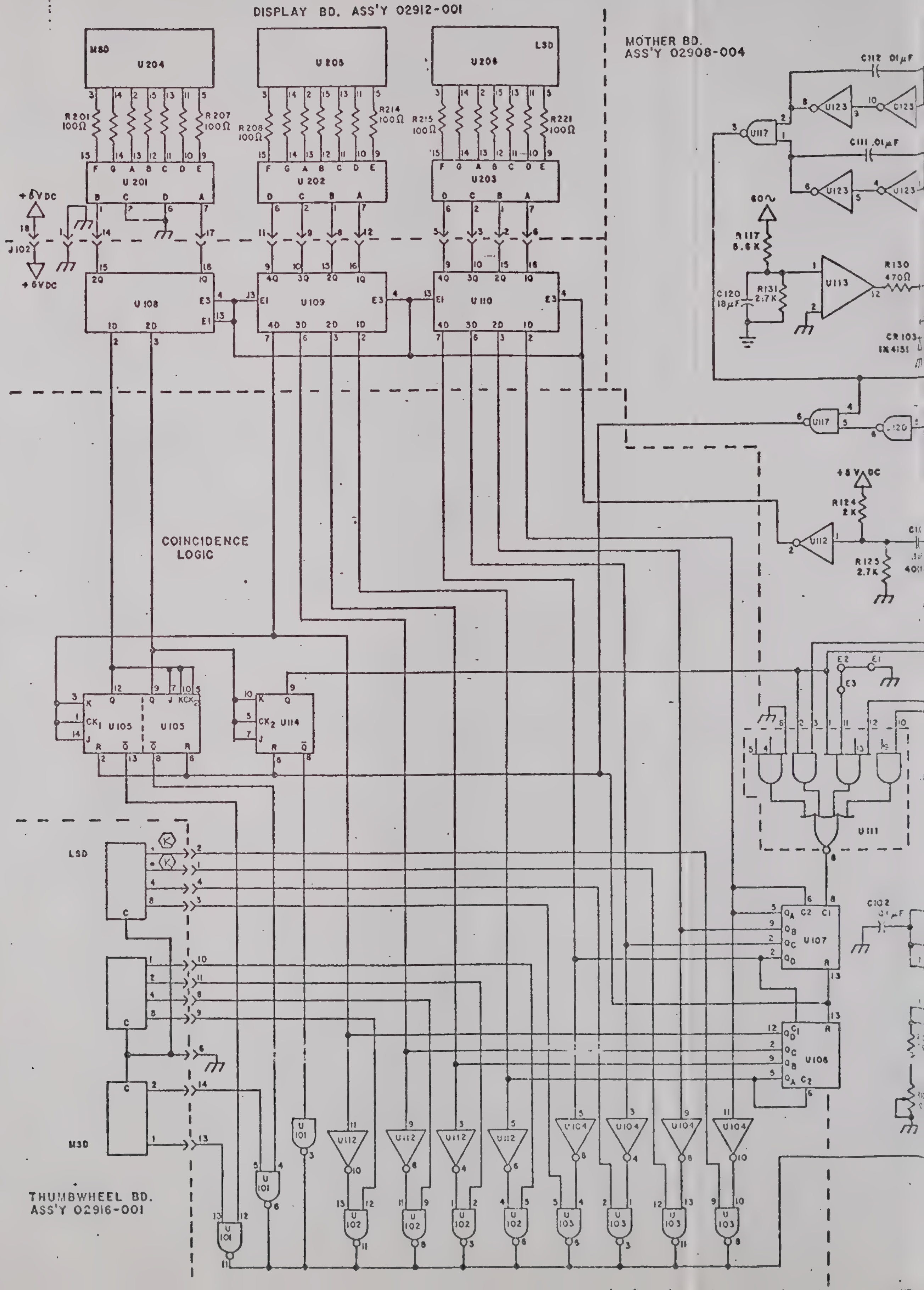

DISPLAY BD. ASS'Y 02912-001
MOTHER BD. ASS'Y 02908-004
COINCIDENCE LOGIC
THUMBWHEEL BD. ASS'Y 02916-001
MSD
LSD
U204
U205
U206
U201
U202
U203
U108
U109
U110
U105
U114
U107
U111
U117
U123
U113
U112
U101
U102
U103
U104
R201 100Ω
R207 100Ω
R208 100Ω
R214 100Ω
R215 100Ω
R221 100Ω
J102
+5VDC
C112 .01μF
C111 .01μF
60~
R117 5.6K
R131 2.7K
C120 18μF
R130 470Ω
CR103 1N4151
R124 2K
R123 2.7K
C102

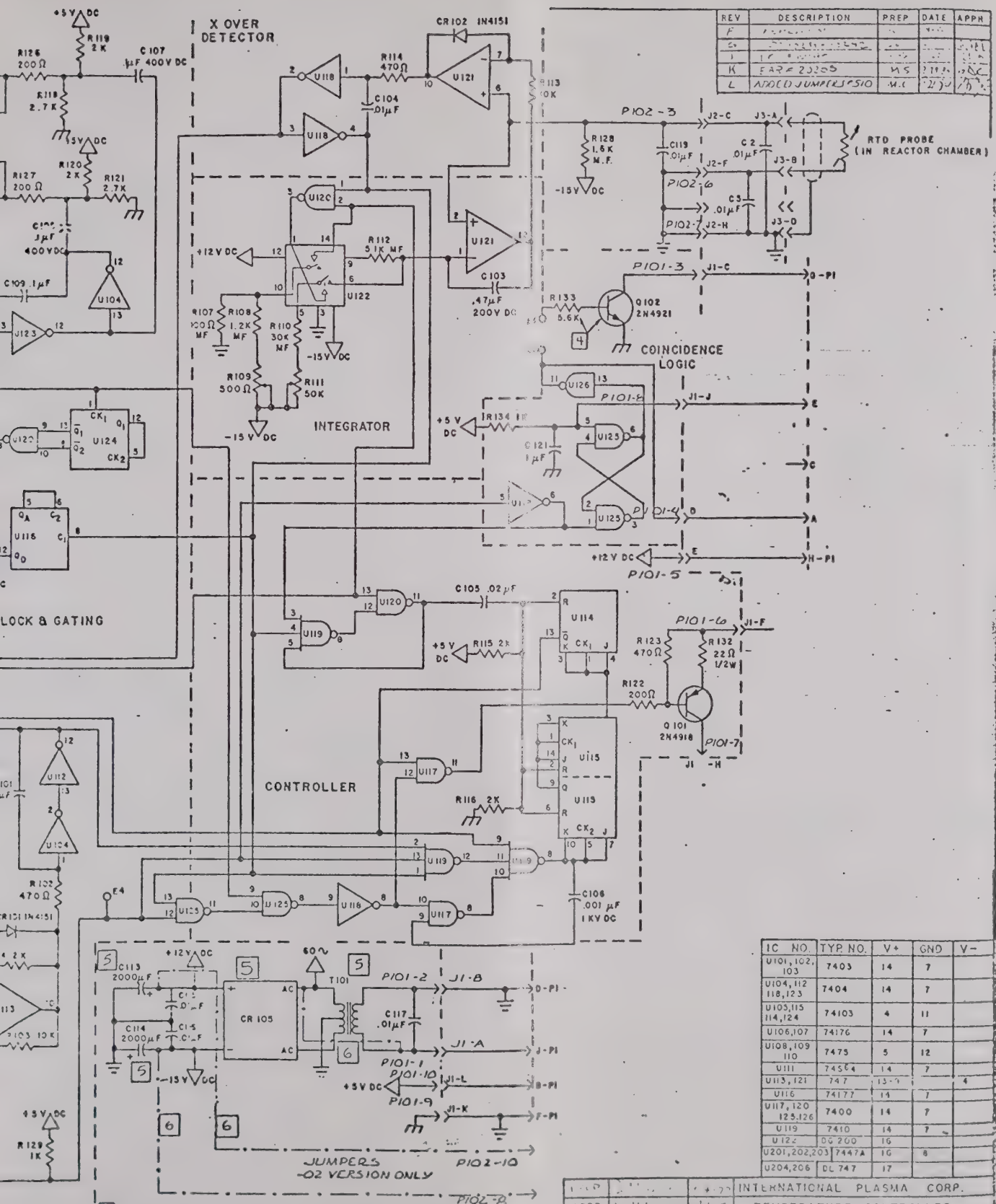

REV	DESCRIPTION	PREP	DATE	APPR
F	[illegible]	[illegible]	[illegible]	
G	[illegible]	[illegible]	[illegible]	[illegible]
I	[illegible]	[illegible]	[illegible]	[illegible]
K	EAR # 20205	M.S	[illegible]	[illegible]
L	ADDED JUMPERS #510	M.C	[illegible]	[illegible]

IC NO.	TYP. NO.	V+	GND	V-
U101, 102, 103	7403	14	7	
U104, 112 118, 123	7404	14	7	
U105, 115 114, 124	74103	4	11	
U106, 107	74176	14	7	
U108, 109 110	7475	5	12	
U111	74564	14	7	
U113, 121	747	13-9		4
U116	74177	14	7	
U117, 120 125, 126	7400	14	7	
U119	7410	14	7	
U122	DG 200	16		
U201, 202, 203	7447A	16	8	
U204, 206	DL 747	17		

6 INSTALL THREE JUMPERS FOR -02 VERSION BOARD.
5 COMPONENTS C113, 114, CR105 + T101 NOT USED IN -02 VERSION.
4 P100 SERIES ONLY, Q102, R133, 55, 66
3 JUMPER PM 921 E2 TO E1 22 AWG
2 ALL MF - METAL FILM RESISTORS 1/4W 2%
1 ALL RESISTORS 1/4W CARBON

INTERNATIONAL PLASMA CORP.

TEMPERATURE CONTROLLER
PM 921C SCHEMATIC

D 02905 L

1 of 1

NOTE: (UNLESS OTHERWISE SPECIFIED)

1. MOUNT ALL COMPONENT 1/8 INCH OFF BOARD, EXCEPT IC SOCKETS, TRIMPOTS, XTAL, AND EDGE CONNECTORS.
2. PM921 JUMPERS E1 TO E2 #22 GA WIRE.
3. PM923 JUMPERS E3 TO E4 #22 GA WIRE.
4. PM921 8000 SERIES: Q102, R133, E1 TO E2, E5 TO E6.
5. PM923 8000 SERIES: Q102, R133, E2 TO E4, E5 TO E6.
6. FOR 02908-02 VERSION DO NOT INSTALL C113, C114, CR105, & T1
   INSTALL JUMPER FROM E1 TO E2.
   INSTALL JUMPER FROM NEGATIVE (-) END C114 TO P102-8 (VIO #22 AWG).
   INSTALL JUMPER FROM POSITIVE (+) END C113 TO P102-10 (VIO #22 AWG).
   INSTALL JUMPER FROM AC OF CR105 TO P101-2 SIDE OF C117 (RED #22 AWG)
7. PERMANENTLY MARK ASSY WITH PROPER NUMBER, DASH Nº IF REQUIRED, AND REVISION LETTER.

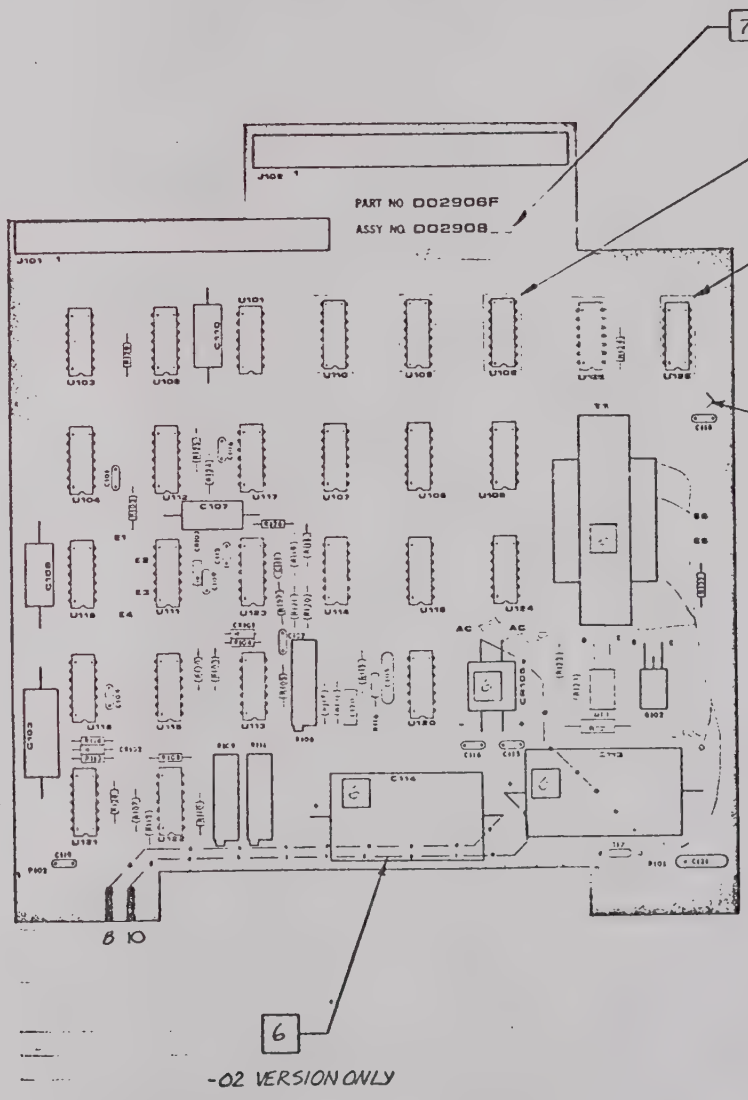

MATERIAL LIST			
REF.NO.	DESCRIPTION	PART NO.	QTY.

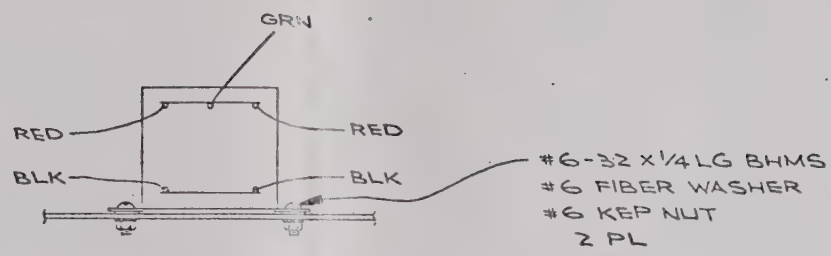

MTG DETAIL OF T1

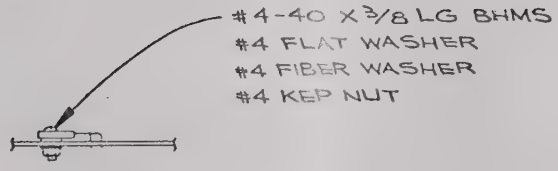

MTG DETAIL OF Q101, Q102

02908-02	6
02908	2 . 5
PART Nº	DESCRIPTION

REV	DESCRIPTION	DATE	CHK	APPR
N	EO 927 IN NOTE 6 P101-2 WAS P101 ROC	[illegible]	[illegible]	[illegible]
M	RECORD CHANGE EO#805	[illegible]	[illegible]	[illegible]
M	JUMPER RELOCATED EO#[illegible]	[illegible]	[illegible]	[illegible]
L	ADD NOTES 6,7 WR EO #510	[illegible]	[illegible]	[illegible]
K	EO# [illegible]	[illegible]	[illegible]	[illegible]
J	EO #11404 [illegible]	[illegible]	[illegible]	[illegible]

REVISION LEVEL

BRANSON/IPC
a SmithKline company

MODEL	NEXT ASSY	
	04483	
	03492	
	03105	

DFT [illegible] DATE [illegible]
CHK [illegible] DATE [illegible]
ENG [illegible] DATE [illegible]
FINISH

TOLERANCES UNLESS OTHERWISE SPECIFIED
.XX ± .XXX ± mm ± ANGLES ± SURF. FIN. √

TITLE
MOTHER BOARD ASSY
TEMP CONTROLLER
PM 921

SCALE	SIZE	DRAWING NO.	SHT / OF	REV
1:1	D	02908-XX	1/3	N

BRANSON/IPC
a SmithKline company

BRANSON INTERNATIONAL PLASMA CORPORATION

INSTRUCTION MANUAL

for

PM 702A

AUTOMATCH

A 00110 Rev D
9 August 1977

31172 Huntwood Avenue
P.O. Box 4136, Hayward, CA 94544
(415) 489-3030 Telex: 337-759

INSTRUCTION MANUAL
for
IPC PM 701-702-703
AUTOMATCH

1.0 INTRODUCTION

1.1 Description

The R.F. Generator is designed and calibrated to drive a fixed 50 ohm resistive load. However, the reactor and plasma present a resistive/capacitive load. Its amplitude and phase depend upon the type and size of chamber and upon various operating parameters, e.g. power level, pressure, type of gas, and temperature. Therefore, a network which matches the impedance of the reactor to the desired 50 ohms is provided in each Reactor Center. The AutoMatch system continuously and automatically adjusts the matching network over the full operating range of the Reactor Center.

The matching network is a capacitor-inductor-capacitor pi network. Both amplitude and phase of the impedance at the input to the network must be correct, i.e. 50 ohms and zero degrees. This requires the adjustment of two components. Therefore both capacitors in the network are variable and are motor-driven. The series inductor is fixed.

As in any parallel tuned RLC network there are two values of capacitance for resonance (phase equals zero). In this application the only legitimate resonance is one where the magnitude of the input current is less than the magnitude of the current in the input capacitor, i.e. $/I_{in}/ < /I_{ci}$, (See Figure A). AutoMatch insures that this relationship holds by automatically increasing Ci and Co if $/I_{in}/ > /I_{ci}$.

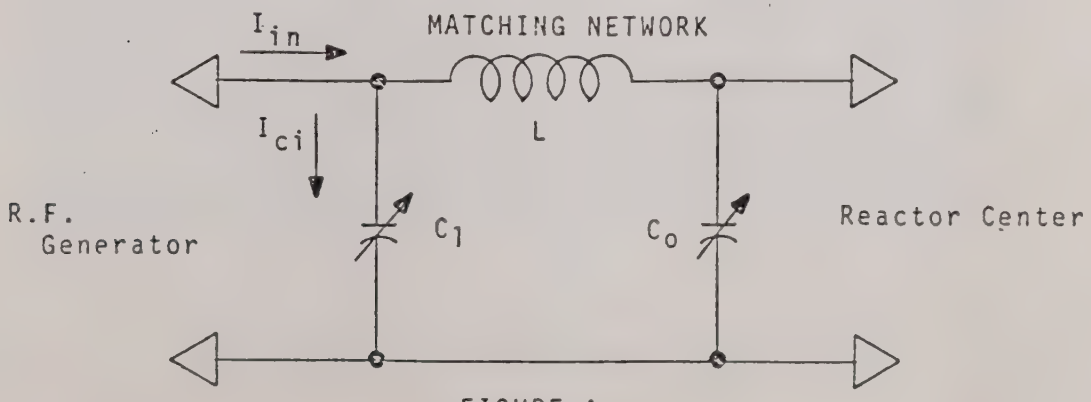

FIGURE A

2.0 OPERATION

The operation of AutoMatch is completely automatic over the functional range of the Reactor Center and requires no operator intervention.

3.0 FUNCTIONAL DESCRIPTION

3.1 Functional Inclusions

An R.F. Coupler which detects the inpedance at the input to the matching network, and provides signals indicative of errors in both amplitude and phase. The coupler also detects $/I_{in}/$ for subsequent comparison to $/I_{ci}/$.

3.2 An amplifier section which amplifies the error signals, i.e. amplitude error and phase error, and amplifies the signal comparing $/I_{ci}/$ and $/I_{in}/$.

3.3 A motor and gear drive section mechanically coupled to the rotors of the air variable capacitors of the matching network. The motors are driven by the appropriate amplifiers in the amplifier section, adjusting the capacitances for minimum error signals.

3.4 The pi matching network consisting of the variable capacitor at the input and output terminals and the series fixed inductor. It also includes circuitry to detect $/I_{ci}/$ for processing with $/I_{in}/$ in the amplifier section.

4.0 CIRCUIT DESCRIPTION

Refer to drawing C02661 for the schematic of AutoMatch.

4.1 R.F. Coupler

The R.F. Coupler, shown schematically within the dashed lines, is an arrangement of lumped components and distributed components mechanically arranged to generate D.C. voltages which, when properly combined, yield the appropriate error signals for both amplitude and phase. The phase error is proportional to the sum of voltages Vp1 and Vp2, which are the D.C. voltages developed on capacitors C205 and C204, respectively. The amplitude error is proportional to the sum voltages Va1 and Va2, which are the D.C. voltages developed on capacitors C207 and C206, respectively. Va1 is proportional to the total input current.

4.2 Phase Error Amplifier

The voltages Vp1 and Vp2 are summed algebraically by the phase error amplifier through input resistors R101 and R102. R108 is a potentiometer to adjust for any minor misalignment in the coupler. The phase error amplifier is a feedback amplifier comprised of A101 with output buffer power transistors Q101 and Q102. The amplifier drives the D.C. motor M202 which is mechanically geared to the rotor of the variable air capacitor C202*, the output capacitor of the matching pi network. The forward gain of the amplifier is determined by the voltage feedback via R116.

4.3 Limit Switches

Switch S201 and S202 are "limit" switches positioned to limit the range of rotation of the rotor of variable air capacitor C202. If the motor is driven by a positive voltage, the capacitor rotor will rotate to its extreme position when S202 is opened. Diode CR206 then prevents current through the motor until the amplifier output voltage is reversed. Limit switch S201 and CR205 similarly restrict the range of capacitor rotation for negative voltage drive.

4.4 Amplitude Error Amplifier

The amplitude error amplifier is identical to the phase error amplifier, driving D.C. motor M201 which is geared to the rotor of variable air capacitor C201*. Capacitor C201 with the fixed capacitors C211 and C212 comprise the input capacitance of the pi matching network. The current through the input capacitance (referred to previously as I_{ci} and ci respectively) is detected by virtue of the voltage across the "gimmick" inductor and rectifier diode CR209. The resulting D.C. voltage Vi is added algebraically with Va in amplifier A101 through input resistor R121, R123, and potentiometer R122. If the input current, represented by Va, exceeds I_{ci} the output of amplifier A101 becomes positive polarity. Diodes CR102 and CR101 then become forward biased driving the outputs of both error amplifiers positive. This results in C201 and C202 being driven to maximum capacitance.

4.5 Power Supply

Supply voltages B+ and B- of +15 and -15 volts respectively, are generated by two full wave rectifiers comprised of T1, capacitors C3, C4, and a diode bridge.

---

* For PM702 and PM703 the reference designator for C201 is C215 and the reference designator for C202 is C216.

5.0 MAINTENANCE

WARNING: HIGH R.F. VOLTAGES EXIST THROUGHOUT THE UNIT. R.F. POWER SHOULD BE REMOVED DURING MAINTENANCE.

5.1 Electrical

All R.F. Coupler and Potentiometer alignments are made at the factory and require no further adjustment.

5.2 Mechanical

For ease of maintenance and to protect the motor driven gear heads, each drive train includes a slip clutch. The D.C. motors, gear heads, spur gears, slip clutch, and variable capacitors are precisely positioned at the factory. If it becomes necessary to replace any of these parts, exercise care in mating the spur gear on the capacitor shaft with the nylon slip clutch gear. The gear teeth should engage approximately 80-90% without binding for a full 360 rotation.

5.2.1 Excessive backlash, symptomized usually by a system oscillation (or hunting) may be caused by loose gears or set screws and/or improperly meshed gears.

5.2.2 The slip force on the slip clutch assemblies is set at the factory. If readjustment is necessary, the spring tension should be set to require a motor current of 25 ma at 12 volts with the nylon gear in a fixed position.

5.3 Capacitor Replacement

If replacement of a variable capacitor, C201 or C202, becomes necessary the following should be observed:

5.3.1 The spur gear should be firmly set on the capacitor shaft.

5.3.2 The limit switch actuating arm should be firmly set on the capacitor shaft with the following orientation:

With the limit switch actuating arm set parallel to the AutoMatch baseplate, the capacitor rotor should be set for 50% capacitance. The limit switch actuating arm should be toward the outer edge of the baseplate, and the capacitor rotor should be toward the center of the baseplate.

5.4 Adjusting the Reflected Power

This adjustment should only be necessary in the event that the PM 701/702/703 is retrofitted in the field. Make the adjustment at one torr of oxygen and with an R.F. level of 300 watts per chamber.

5.4.1 Units Without DPS-1000

Refer to figure 6. There are three adjustable resistors in the auto tuner. These are accessible through a vertical slot in the rear panel of the Reactor Center, and the one of concern is R108, the center resistor. Observing the reflected power on the system power meter, adjust R108 for minimum reflected power. If the system "hunts" or oscillates, turn R108 clockwise until "hunting" ceases. The reflected power should be less than 6 watts.

5.4.2 Units with DPS-1000

Refer to figure 7. There are five adjustable resistors in the Auto tuner/DPS-1000. These are accessible through a vertical slot in the rear panel of the Reactor Center and the one of concern is R108, the second resistor from the top. Observing the reflected power on the system power meter, adjust R108 for minimum reflected power. If the system "hunts" or oscillates, turn R108 clockwise until "hunting" ceases. The reflected power should be less than 6 watts.

5.5 Tuning Procedure

5.5.1 Remove L201 and disconnect strap from coupler to C201.

5.5.2 Loosen motor clamp.

5.5.3 Disengage motor gears from C201 and C202 gears by pulling motor housings back into tuner body.

5.5.4 Gently tighten motor bracket to hold motors in place.

5.5.5 Open C201 to minimum capacitance position; keep it off both limit switches. There should be two 100pf ceramic tubular capacitors in the padder bracket of C201.

5.5.6 Open C202 to middle position.

5.5 (continued)

5.5.7 Refer to figure 2 for potentionmeter locations (R108, R111, & R122).

5.5.8 Remove A102.

5.5.9 Connect a 50 ohm dummy load directly to coupler output - nothing else should be connected to coupler output at this time.

5.5.10 Plug 701-702-703 into 117 volts AC supply.

5.5.11 Connect a 500 watt generator to coupler input.

NOTE: DURING THE FOLLOWING STEPS; COVER THE COUPLER SIDE ONLY WITH ALUMINUM SAFETY COVER TO PREVENT ACCIDENTAL CONTACT WITH HIGH VOLTAGES PRESENT IN THE R.F. COUPLER SECTION.

5.5.12 Turn generator on and up to 500 watts.

5.5.13 Adjust R108 until M202 turns clockwise (viewed from Gearhead end of the motor). Manually close switch S202, and observe that the motor does not stop rotating. Manually close switch S201 and observe that the motor stops.

5.5.14 Adjust R108 until M202 turns counter clockwise (viewed from gearhead end of the motor). Manually close S201 and observe that M202 does not stop. Manually close S202 and observe that the motor stops.

5.5.15 Adjust R108 until M202 stops. This will balance A101A for zero output.

5.5.16 Adjust R111 until M201 turns clockwise (viewed from the gearhead end of motor). Manually close S203, and observe that M201 does not stop rotating. Manually close S204 and observe that M201 stops.

5.5.17 Adjust R111 until M201 turns counter clockwise. Manually close S204 and observe that M201 does not stop rotating. Manually close S203 and observe that M201 stops.

5.5.18 Adjust R111 until M201 stops. This will balance A101B for zero output.

5.5.19 Disconnect AC power from PM 701/702/703. This will bleed supplies via M201 and M202.

5.5 (continued)

5.5.20 Turn off R.F. Power.

5.5.21 Disconnect 50 ohm dummy load.

5.5.22 Connect strap from 701 and 702 coupler output in C201. C201 should be the only thing connected at this point.

5.5.23 Install A-102 and reconnect to 117 volt AC supply.

5.5.24 Turn up R.F. to 50 watts.

5.5.25 Adjust R122 until neither M201 nor M202 rotate toward minumum capacitance.

5.5.26 Turn of R.F. Power.

5.5.27 Install L201.

5.5.28 Connect simulated load.
EXAMPLE: (refer to next page) Figure B.

5.5.31 (continued)

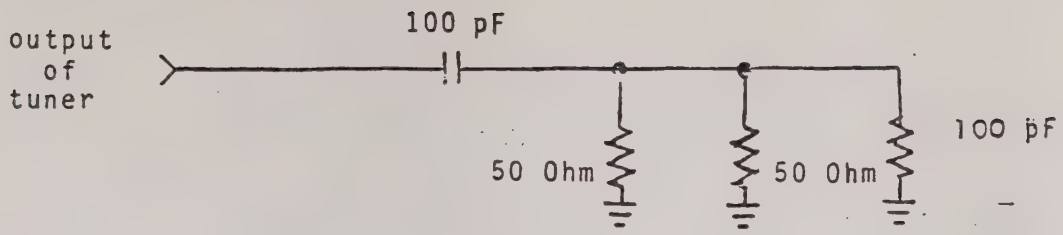

FIGURE B

5.5.31.1 Engage motors M201 and M202 to their proper positions.

5.5.32 Replace top cover.

5.5.33 Turn on R.F. Power to 500 watts if obtainable.

5.5.34 Rotate R108 clockwise for 6 watts or less reflected and 500 watts forward.

5.5.35 Turn off R.F. Power and disconnect generator.

5.5.36 Remove 117 volt AC supply from 701-702-703.

5.5.37 Disconnect simulated load.

5.5.38 Recheck mechanical connections.

5.6 Adjusting the Operating Range

The matching is achieved by virtue of two motor driven capacitors. Each of these capacitors has a limited range over which it will vary. They have been selected to accommodate the various operating parameters of a system, e.g. gas flow, pressure, R.F. Power, but differences in Reactor Chambers may require adjustment of the location or center of the range.

5.6.1 Upon installation of the unit in the system, note there is an upper variable capacitor with fixed capacitors in parallel with it, and mounted on a bracket on the variable capacitor. The location or center of the range for this variable capacitor is determined by the number of fixed capacitors on the bracket. If the range is such that the variable capacitor approaches or reaches its maximum value (fully meshed), it may be brought closer to the center or away from the maximum by adding fixed capacitance. Conversely, if the variable capacitor

5.6.1 (continued)

approaches or reaches its minimum value, it may be brought closer to the center or away from the minimum by removing fixed capacitance.

5.6.2 The upper variable capacitor is connected to the lower variable capacitor through a fixed inductor of approximately 6 turns of wound tubing. Although the inductor is fixed, its value can be adjusted by compressing the length so that the turns are closer together, or by stretching the length so that the turns become further apart. Compressing increases the inductance and stretching decreases the inductance. Adjusting the value of this inductor is the mechanism for centering the range of the lower variable capacitor. However, in order to adjust the inductor, first unfasten the top of the inductor. Refasten it after adjusting.

5.6.3 If the lower variable capacitor approaches or reaches its maximum value, it may be brought closer to its center or away from its maximum by increasing the inductance (compressing the inductor). If the lower variable capacitor approaches or reaches its minimum value, it may be brought closer to its center or away from its minimum by decreasing the inductance (stretchint the inductor). If the stretching or compressing of the inductor becomes too extreme, it may be necessary to use an inductor with a different number of turns. Increasing the number of turns increases the inductance. There are two inductors supplied with the unit in case substitution for the one installed is necessary.

5.6.4 The table below shows the operating parameters which the units are adjusted to cover at the factory. In case of retrofitting in the field, it may be necessary to readjust for the particular chamber(s) in the reactor. Simply set up each of the conditions, and for each verify that the variable capacitors are in their operating range, i.e. not at a minimum or maximum value. Correct or adjust the ranges by procedure described above.

-6-4 (continued)

8" x 18" CHAMBER	
ETCHING WITH TUNNEL	0.3 to 1.7 TORR 50 to 400 WATTS/CHAMBER
STRIPPING WITH OR WITHOUT TUNNEL	7.0 to 3.0 TORR 300 to 500 WATTS/CHAMBER
10" x 18" CHAMBER	
ETCHING WITH TUNNEL	0.3 to 1.7 TORR 150 to 450 WATTS/CHAMBER
STRIPPING WITH OR WITHOUT TUNNEL	1.0 TO 3.0 TORR 400 to 700 WATTS/CHAMBER

REV	E
DWG NO.	07694

BRANSON INTERNATIONAL PLASMA CORPORATION

ENGINEERING PARTS LIST

07694
PART NO

REV	DESCRIPTION	DATE	CHK	APPR
E	ITEM 33 ADDED /EO 646	12-14-84		
D	D10486 WAS D04482 AND	10-11-84		
	D4440 WAS D10456 EO # 513			
C	EO 450 DELETE "10AMP" FROM FLI R.C.	9-14-84		
B	E.O. #12174 9-29-83 RFE	9-29-83		
A	RELEASED E.O. #11965 BJ	5-13-83		
3	REVISED BJ	3-8-83		
2	REVISED BJ	4-19-82		
1	PRELIMINARY	7-17-81		

REVISION LEVEL

NEXT ASSY.
A 07693
A 10370
A 10371
A 10372

BRANSON/IPC
a SmithKline company

31172 HUNTWOOD AVE
HAYWARD, CALIFORNIA
94544

TITLE: AUTOMATCH ASSEMBLY
PM 702-A

SIZE	DWG. NO.	REV.	CHK.	APPR.
D	07694	E		

DRAWN	DATE
E.AcM	6-30-81

A05495 REV. B

ENGINEERING PARTS LIST

REF. NO.	DESCRIPTION	PART NO.	QTY.
13	BASE PLATE MOUNTING BRACKET	B 02814	1
7	HOUSING RF PARTITION	C 02817	1
6	HOUSING COVER	C 02818	1
5	MOTOR CRADLE	B 02819	1
4	RF CONDUCTOR SUPPORT PLATE	B 02820	1
2	RF CONDUCTOR STRAP, LOWER	B 02825	1
32	RF COUPLER ASSEMBLY	C 02827	1
1	LIMIT SWITCH STOP BRACKET	B 03064	2
12	INPUT CAPACITOR BRACKET	B 03212	1
C1	INPUT CAPACITOR ASSEMBLY	C 03470	1
M1	INPUT MOTOR ASSEMBLY	B 03471	1
	CIRCUIT BOARD ASSEMBLY	B 03690	1
15	INPUT CAPACITOR BRACKET	B 04396	1
M2	OUTPUT MOTOR ASSEMBLY	B 04416	1
14	RF CONDUCTOR COUPLER	B 04427	1
16	MOTOR CAP	B 04432	1
C2	OUTPUT CAPACITOR ASSEMBLY	C 04440	1
11	BASE PLATE	D 10496	1
8	HOUSING REAR ANGLE	C 07695	1
9	HOUSING FRONT ANGLE	D 07696	1
L1	INDUCTOR, 6-1/2 TURNS	B 02824	A/R
L1	INDUCTOR, 7-1/2 TURNS	B 04455	A/R
L1	INDUCTOR, 8-1/2 TURNS	B 04456	A/R
L1	INDUCTOR, 9-1/2 TURNS	B 04457	A/R
L1	INDUCTOR, 10-1/2 TURNS	B 04458	A/R
L1	INDUCTOR, 11-1/2 TURNS	B 04459	A/R
L1	INDUCTOR, 2-1/2 TURNS	B 04460	A/R
L1	INDUCTOR, 3-1/2 TURNS	B 04461	A/R
L1	INDUCTOR, 4-1/2 TURNS	B 04462	A/R
L1	INDUCTOR, 5-1/2 TURNS	B 04463	A/R
	SCHEMATIC	C 04499	REF

BRANSON/IPC
a SmithKline company
31172 HUNTWOOD AVE
HAYWARD, CALIFORNIA
94544

TITLE
AUTOMATCH ASSEMBLY
PM 702-A

SIZE	DWG. NO.	REV.	CHK.	APPR.
D	07694	E		

DRAWN	DATE	SHEET	OF
B.J.	4-19-82	2	4

ENGINEERING PARTS LIST

REF. NO.	DESCRIPTION	PART NO.	QTY.
21	SCREW, 10-32 UNF 2A x 1.50 BHMS STL		1
22	SCREW, 8-32 UNC 2A x 1.25 SHCS STL		2
23	SCREW, 6-32 UNC 2A x .187 BHMS BRASS		11
24	SCREW, 10-32 UNF 2A x .375 BHMS BRASS		1
25	NUT, 6-32 UNC 2B, BRASS HEX		3
27	LOCKING TERMINAL LUG		1
28	SCREW, 8-32 UNC 2A x .187 BHMS NYLON		1
29	LOCKING TERMINAL LUG		5
31	WASHER #8 NYLON FLAT		2
33	LABEL, SERIAL	780-12969-01	1

BRANSON/IPC
a SmithKline company

31172 HUNTWOOD AVE
HAYWARD, CALIFORNIA
94544

TITLE: AUTOMATCH ASSEMBLY
PM 702-A

SIZE	DWG. NO.	REV	CHK.	APPR.
D	07694	E		

DRAWN	DATE	SHEET
B.J.	4-19-82	SHEET 4 OF 4

ENGINEERING PARTS LIST

REF. NO.	DESCRIPTION	PART NO.	QTY.
	CONTROL BOARD BOX	C 09748	1
C11, 12	TRANSMITTING CAP 100 pF 5 KV	1500-0189	2
C4-8	CAPACITOR, FEEDTHRU 1000 pF	1500-0205	5
C3, 9	CAPACITOR, 2000 uF 24V	1500-0208	2
P2	EDGE CONNECTOR, 22 PIN	2100-0223	1
E1-6	INSULATED TERMINAL, USECO #1417-9	2160-0207	6
J1	RF CONNECTOR	2180-0190	1
FL1	FILTER, LINE	2700-0003	1
17	2" CERAMIC STANDOFF	3100-0142	1
R1-2	RESISTOR, C.C. 100 OHM 2W	4705-0101	2
CR5-8	DIODE, MOTOROLA IN4007	4800-0013	4
CR3	DIODE BRIDGE, INT. RECTIFIER #18DB2A	4800-0044	1
CR4, 9	DIODE, MOTOROLA IN4151	4800-0045	2
S1-4	SWITCH SPDT, MOMENTARY-ON	5100-0154	4
T1	TRANSFORMER	5600-0006	1

BRANSON/IPC
a SmithKline company
31172 HUNTWOOD AVE
HAYWARD, CALIFORNIA
94544

TITLE: AUTOMATCH ASSEMBLY
PM 702-A

SIZE	DWG. NO.	REV.	CHK.	APPR.
D	07694	E		

DRAWN	DATE	SHEET	OF
B.J.	4-19-82	3	4

0

REV	F
DWG NO.	C 02827

BRANSON INTERNATIONAL PLASMA CORPORATION

ENGINEERING PARTS LIST

REV	DESCRIPTION	DATE	CHK	APPR
F	E.O. =11333 AK	12-81		

REVISION LEVEL

NEXT ASSY.

BRANSON/IPC
a SmithKline company

31172 HUNTWOOD AVE
HAYWARD, CALIFORNIA
94544

TITLE
R.F. CONDUCTOR
SUB ASSEMBLY

SIZE	DWG. NO.	REV.	CHK.	APPR.
D	02827	F		

DRAWN	DATE
J.V.	7-5-78

ENGINEERING PARTS LIST

REF. NO.	DESCRIPTION	PART NO.	QTY.
1	R.F. CONDUCTOR	B 02821	1
C210,209	CAPACITOR 100pf, CM 05-ED-K1J03	1500-0117	2
C203	CAPACITOR, 8 TO 8.2 pf, SPRAGUE, SGA-V82	1500-0222	1
L202,203	COIL, 39 uH, J.W. MILLER 9210-56	1800-0012	2
-10	LOCKING TERMINAL LUG, H.H. SMITH 1416-8		8
2	RING TERMINAL-NON INSULATED,12-10 AWG H.H.SMITH 4934		7
3	SCREW, 8-32 UNF - 2Ax3/4 BHMS NYULON		4
4	NYLON SPACER - RND, .25 ODx,25 LG H.H. SMITH 4008	2860-4008	4
5	NYLON SPACER - RND, .25 ODx.187 LG H.H. SMITH 4005	2860-4005	3
CR201-203	DIODE, MOTOROLA IN4151	4800-0045	3
6	WASHER - NYLON - CAE 6000-000		
7	NUT - 8-32 #BAE-0832-0002, 8-32 UNF-2B HEX KEPS NUT		
8	WIRE, 12 GA BUSS WIRE		A/R
9	WIRE, 16 GA BUSS WIRE		A/R

BRANSON/IPC
a SmithKline company
31172 HUNTWOOD AVE
HAYWARD, CALIFORNIA
94544

TITLE: R.F. CONDUCTOR SUB ASSEMBLY

SIZE	DWG. NO.	REV.	CHK.	APPR.
D	02827	F		

DRAWN	DATE	SHEET	OF
J.V.	7-5-78	2	2

ENGINEERING PARTS LIST O

REF. NO.	DESCRIPTION	PART NO.	QTY.
1	RF COUPLER COVER	B 03257	1
2	RF COUPLER BODY	B 03258	1
3	RF COUPLER CONDUCTOR	B 03259	1
4	NYLON SPACER, .250 THK.	2860-4008	2
	H.H. SMITH #4008		
5	NYLON BHMS	2860-6328	2
	#6-32 x ½"		
C1, C2	CAPACITOR, 1000 MF FEED THRU	1500-0205	2
	ERIE #327-000-X5U0-102M		
J1, J2	UHF CONNECTOR	2180-0190	2
	AMPH #83-798		
R2	RESISTOR, 110 ohm 1 W C.C.	4704-0111	1
R1	POTENTIOMETER	4750-0002	1
	750 ohm A&B TYPE J		
CR1, CR2	DIODE #IN4151	4800-0045	2
6	NYLON #8 WASHER		6
7	#6 SOLDER LUG		2
8	#10 SOLDER LUG		4
9	#318 SOLDER LUG		1
10	#12 GA BUSS WIRE		A/R
11	#18 GA BUSS WIRE		A/R

INTERNATIONAL PLASMA CORPORATION
31159 SAN BENITO
HAYWARD, CALIF.
94544

TITLE: RF COUPLER ASS'Y

SIZE	DWG. NO.	REV.	CHK.	APPR.
C	03260	D	A. Rocha 8-6-79	

DRAWN	DATE	SHEET 2 OF 2
	7-12-79	

ENGINEERING PARTS LIST 0

REF. NO.	DESCRIPTION	PART NO.	QTY.
C1	AIR VARIABLE CAP	1550-0201	1
	EF JOHNSON 154-513-101		
1	STL EXSPANSION PIN .062 DIA X .50 DP	2860-9001	1
	Mc MASTER-CARR 98296A109		
2	STL EXPANSION PIN .093 DIA X .750 DP	2860-9003	1
	Mc MASTER-CARR 98296A181		
3	GEAR MODIFICATION	B04564	1
4	INTERCONNECTION BRKT	B 03533	2

INTERNATIONAL PLASMA CORPORATION
31159 SAN BENITO
HAYWARD, CALIF.
94544

TITLE: PM 702 & 703
C1 - INPUT CAPACITOR
ASSY

SIZE	DWG. NO.	REV.	CHK.	APPR.
C	03470	C		

DRAWN	DATE	SHEET 2 OF 2
JV	7-7-78	

A 04289 REV B

REV	D
DWG NO.	B 03471

BRANSON INTERNATIONAL PLASMA CORPORATION

ENGINEERING PARTS LIST

REV	DESCRIPTION	DATE	CHK	APPR
D	JD	4-7-82		

REVISION LEVEL

NEXT ASSY.
A 09290
A 09280
A 06650
D 03139

BRANSON/IPC
a SmithKline company

31172 HUNTWOOD AVE
HAYWARD, CALIFORNIA
94544

TITLE: M1 INPUT MOTOR DRIVE ASSEMBLY

SIZE	DWG. NO.	REV.	CHK.	APPR.
B	03471	D		

DRAWN	DATE
J.V.	6-28-78

A05495 REV. B

ENGINEERING PARTS LIST

REF. NO.	DESCRIPTION	PART NO.	QTY.
3	STL EXPANSION PIN, .062 DIA x .50 LG,	2860-9001	1
	McMASTER-CARR #98296A109		
M1	MOTOR, MICRO MO 3301409-03-2-1734:1	3500-0005	1
2	CLUTCH, STERLING SLIPCLUTCH #MM-2	3500-0015	1
4	GEAR ALUM, STERLING S21A-54	3500-0023	1

BRANSON/IPC
a SmithKline company

31172 HUNTWOOD AVE
HAYWARD, CALIFORNIA
94544

TITLE: M1 INPUT MOTOR DRIVE ASSEMBLY

SIZE	DWG. NO.	REV.	CHK.	APPR.
B	03471	D	[illegible]	

DRAWN	DATE	SHEET 2 OF 2
J.V.	6-28-78	

DIONEX GAS PLASMA SYSTEMS

ENGINEERING PARTS LIST

DWG. NO.	REV.
B 03690	F

REV	DESCRIPTION		DATE	CHK	APPR
F	REVISED E.O. #11751	MS	12-21-82	XR	DH
E	E.O. #11209	AK	10-81		
D	E.A.R.#20314		9-8-80		
C	E.O. #10535, 10543		5/7/79		

REVISION LEVEL

DIONEX GAS PLASMA DIVISION

31159 SAN BENITO
HAYWARD, CALIF. 94544

NEXT ASSY.	DRAWN	DATE	TITLE
	K.G.	5/7/79	PM 702, 703 AUTOMATCH CIRCUIT BOARD ASSEMBLY
	CHECKED	DATE	
	ENG.	DATE	SIZE: B; DRAWING NO.: 03690; REV.: F
			DO NOT SCALE THIS DRAWING

A05495 REV A

ENGINEERING PARTS LIST

REF. NO.	DESCRIPTION	PART NO.	QTY.
6	PRINT CIRCUIT BOARD	02704	1
2	HEATSINK	B 04485	4
C101, 102	CAPACITOR .01uF 500V	1500-0001	2
	SPRAGUE 5GAS-10		
1	DIP SOCKET 14PIN	2110-0001	2
	AMPHENOL 021-2000-144		
R101, 102	RESISTOR CARBON COMP	4702-0153	2
	15K 1/4W		
R121	RESISTOR CARBON COMP	4702-0102	1
	1.0K 1/4W		
R125	RESISTOR CARBON COMP	4702-0103	2
124	10K 1/4W		
R116, 117	RESISTOR CARBON COMP	4702-0154	2
	150K 1/4W		
R109, 110	RESISTOR CARBON COMP	4702-0472	2
	4.7K 1/4W		
R123	RESISTOR CARBON COMP	4702-0473	1
	47K 1/4W		
R120	RESISTOR CARBON COMP	4702-0474	1
	470K 1/4W		
R118, 119	RESISTOR CARBON COMP	4702-0562	2
	5.6K 1/4W		
R107, 115	RESISTOR CARBON COMP	4703-0050	2
	5.1 – 1/2W		

DIONEX
GAS PLASMA DIVISION
31159 SAN BENITO
HAYWARD, CALIF.
94544

TITLE: PM 702, 703
AUTOMATCH CIRCUIT BOARD ASSEMBLY

SIZE	DWG. NO.	REV.	CHK.	APPR.
B	03690	F		

DRAWN	DATE	SHEET 2 OF 3
K.G.	5/7/79	

A 04289 REV

ENGINEERING PARTS LIST

REF. NO.	DESCRIPTION	PART NO.	QTY.
122	POTENTIOMETER 20K	4750-0010	1
	BOURNES 3069P-1-203		
R108, 111	POT 10K	4750-0013	2
	BOURNES 3069P-1-103		
A101	OPERATIONAL AMP	4800-0012	2
102	FAIRCHILD 747		
CR101, 102	DIODE	4800-0045	2
	IN4151		
Q101	TRANSISTOR	4800-0047	2
103	MOTOROLA 2N4921		
Q102	TRANSISTOR	4800-0046	2
104	MOTOROLA 2N4918		
3	SCREW		4
	4-40 UNC-2A X .375 BHMS STL		
4	NUT		4
	4-40 KEPNUT STL		
5	WASHER		4
	4. FLAT FIBER WASHER		

DIONEX
GAS PLASMA DIVISION
31159 SAN BENITO
HAYWARD, CALIF.
94544

TITLE
PM 702, 703
AUTOMATCH CIRCUIT BOARD ASSEMBLY

SIZE	DWG. NO.	REV	CHK.	APPR.
B	03690	F		

DRAWN	DATE	SHEET 3 OF 3
K.G.	5/7/79	

REV	D
DWG NO.	B 04416

BRANSON INTERNATIONAL PLASMA CORPORATION

ENGINEERING PARTS LIST

REV	DESCRIPTION	DATE	CHK	APPR
C	JD	4-7-82	TK	

REVISION LEVEL

NEXT ASSY.
A 09290
A 09280
A 06650
D 03139

BRANSON/IPC
a SmithKline company

31172 HUNTWOOD AVE
HAYWARD, CALIFORNIA
94544

TITLE: M2 OUTPUT MOTOR-DRIVE ASSEMBLY

SIZE	DWG. NO.	REV.	CHK.	APPR.
B	04416	C		

DRAWN	DATE
J.V.	5-23-78

ENGINEERING PARTS LIST

REF. NO.	DESCRIPTION	PART NO.	QTY.
3	STL EXPANSION PIN, .062 DIA x .50 DP	2860-9001	1
	McMASTER-CARR #98296A-109		
1	MOTOR, MICRO MO 3301409-03-2-975:1	3500-0004	1
2	CLUTCH, STERLING SLIPCLUTCH #MM-2	3500-0015	1
4	GEAR ALUM, STERLING, S21A-54	3500-0023	1

BRANSON/IPC
a SmithKline company

31172 HUNTWOOD AVE
HAYWARD, CALIFORNIA
94544

TITLE: M2 OUTPUT MOTOR-DRIVE ASSEMBLY

SIZE	DWG. NO.	REV.	CHK.	APPR.
B	04416	C		

DRAWN	DATE	SHEET	OF
J.V.	6-28-78	2	2

ENGINEERING PARTS LIST

REF. NO.	DESCRIPTION	PART NO.	QTY.
C2	AIR VARIABLE CAP	1550-0202	1
	EF JOHNSON 154-510		
1	STL EXPANSION PIN .062 DIA x .50 DP	2860-9001	1
	McMASTER-CARR 98296A109		
2	STL EXPANSION PIN .093 DIA x .75 DP	2860-9003	1
	McMASTER-CARR 98296A181		
3	INTERCONNECT BRK'T	B 03533	2
4	GEAR MODIFICATION	B 04564	1
	Replaced C03470-002		

INTERNATIONAL PLASMA CORPORATION
31159 SAN BENITO
HAYWARD, CALIF.
94544

TITLE: P/N 702
C2- OUTPUT CAPACITOR ASS'Y

SIZE	DWG. NO.	REV.	CHK.	APPR.
C	04440	B	RHS 7-7-78	

DRAWN	DATE	SHEET
JY	7-7-78	2 OF 2

A 06388 REV B

REV	DESCRIPTION		DATE	APPR
B	EO# 10348		[illegible]	[illegible]
C	EAR# 20322	PB	3 23 80	

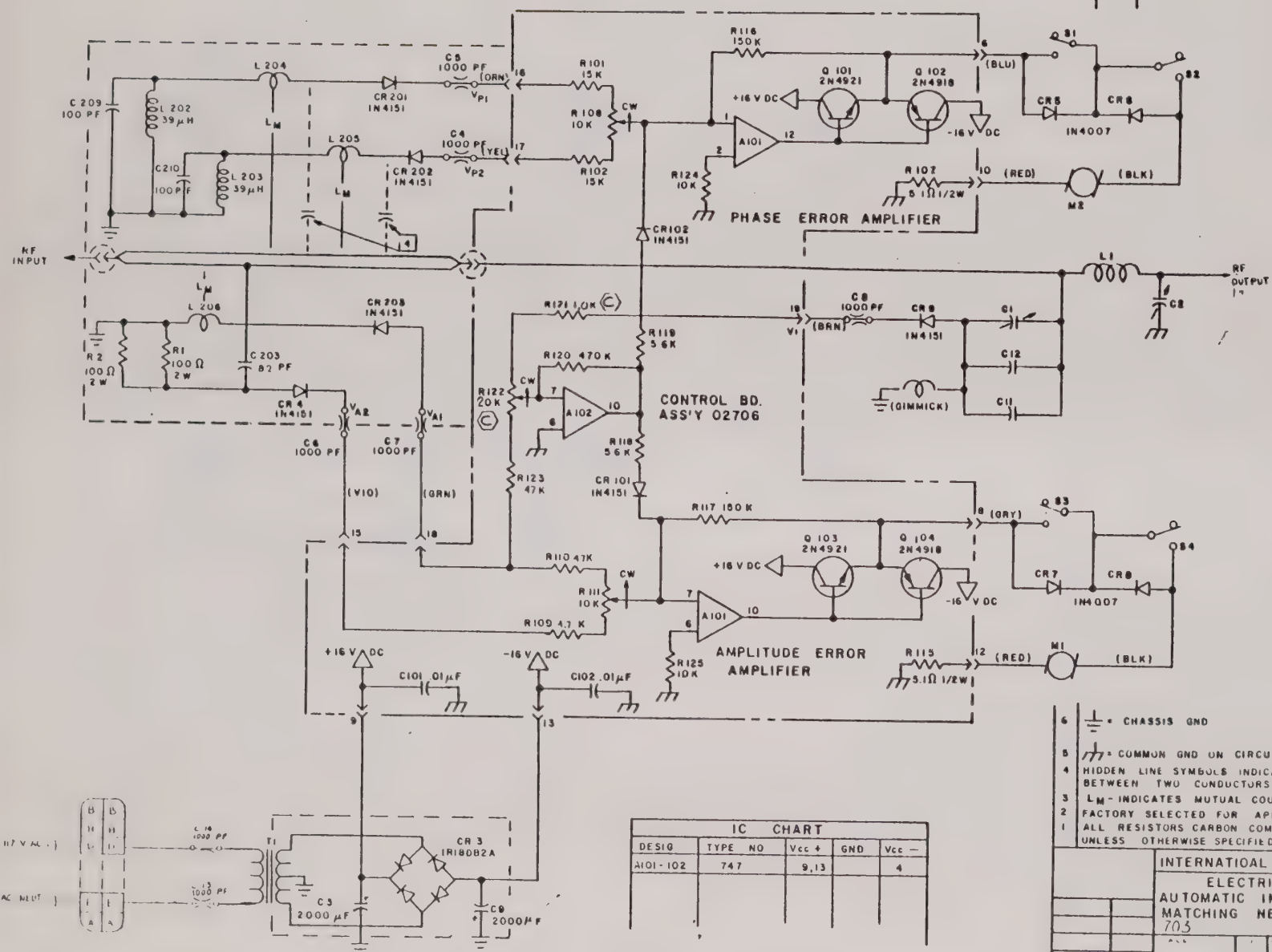

IC CHART				
DESIG	TYPE NO	Vcc +	GND	Vcc −
A101-102	747	9,13		4

6 ⏚ = CHASSIS GND

5 ⏚ = COMMON GND ON CIRCUIT BD

4 HIDDEN LINE SYMBOLS INDICATE CAPACITANCE BETWEEN TWO CONDUCTORS

3 L_M - INDICATES MUTUAL COUPLING

2 FACTORY SELECTED FOR APPLICATION

1 ALL RESISTORS CARBON COMPOSITION 1/4 W UNLESS OTHERWISE SPECIFIED

INTERNATIOAL PLASMA CORP

ELECTRICAL SCHEMATIC AUTOMATIC IMPEDENCE MATCHING NETWORK PM 702, 703

C 04499 REV. C

REVISIONS				
LTR	DESCRIPTION	PREP	DATE	APPROVED
A	E.O.# 10234			
B	E.O.# 10329	JV	4/10/78	
C	REVISED PER E.O.# 10334	JV	6-21-78	PLS / PCD
D	E.O.# 10348	SS	7-12-78	AM / PCD

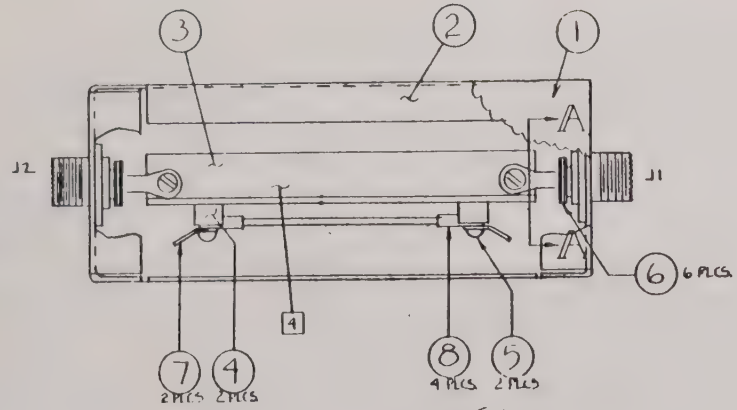

VIEW A~A

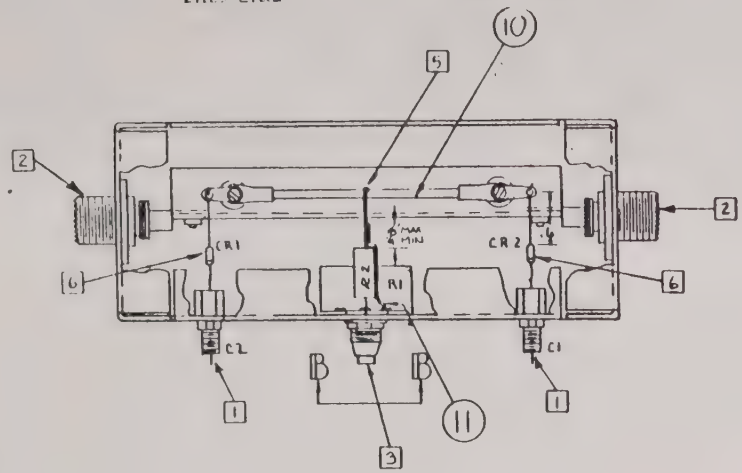

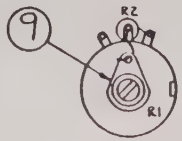

VIEW B~B

ORDER OF ASSEMBLY

6. INSTALL CR1, CR2 FROM SOLDER LUGS TO CAPACITORS C1, C2 AS SHOWN
5. SOLDER FREE END OF R1 AROUND THE CENTER OF THE PICK UP WIRE
4. INSTALL RF CONDUCTOR ASS'Y INTO COUPLER AS SHOWN
3. INSTALL RESISTOR ASS'Y INTO COUPLER BODY AS SHOWN
2. INSTALL CONNECTOR ASS'Y INTO ENDS OF COUPLER BODY
1. INSERT C1 C2 IN COUPLER BODY

TOLERANCES UNLESS OTHERWISE SPECIFIED
FRACTIONS DEC ANGLES
2 .2 2

APPROVALS	DATE
DESIGN	
DRAWN	8/Nov/78

INTERNATIONAL PLASMA CORP.

RF COUPLER ASS'Y

SCALE	SIZE	DRAWING NO	REV.
FULL	C	03260	D

DO NOT SCALE DRAWING — SHEET 1 OF 2

NOTES:

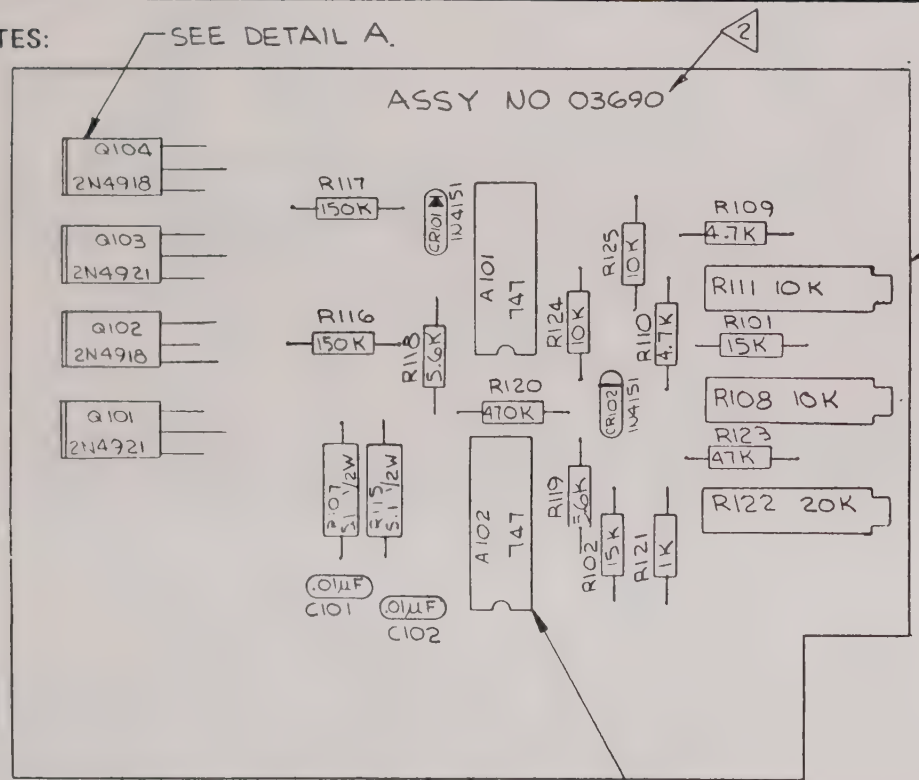

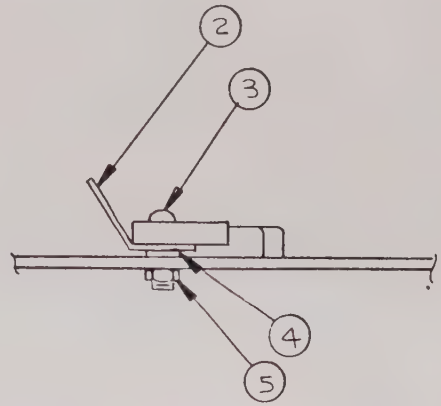

TRANSISTOR MTG DETAIL
(DETAIL A)

NOTES: (UNLESS OTHERWISE SPECIFIED

1. ALL RESISTORS 1/4 W, CARBON
2. STAMP: ASSY NO 03690

REV	DESCRIPTION	DATE	CHK	APPR
A	EO 10348	10-13-78		
B	EO 10435	1-12-79		
C	EO 10543	5-79		
F	REVISED E.O # 11751 M.S.	3/[illegible]	[illegible]	DH

QTY	ITEM	PART NUMBER	DESCRIPTION

	NAME	DATE
DFT	K. GUINN	10/13/80
CHK		
ENG	[illegible]	12/[illegible]

MODEL | NEXT ASSY

FINISH:

DIONEX GAS PLASMA DIVISION

TOLERANCES UNLESS OTHERWISE SPECIFIED:
.XX ± mm. ± SURF. FIN. ✓
.XXX ± ANGLES ±

TITLE
PM 703, PM 702
AUTOMATCH BD ASSY

SCALE	SIZE	DRAWING NUMBER	SHT	REV
2:1	B	03690	1 OF 3	F

GAF Draftrace 2.00

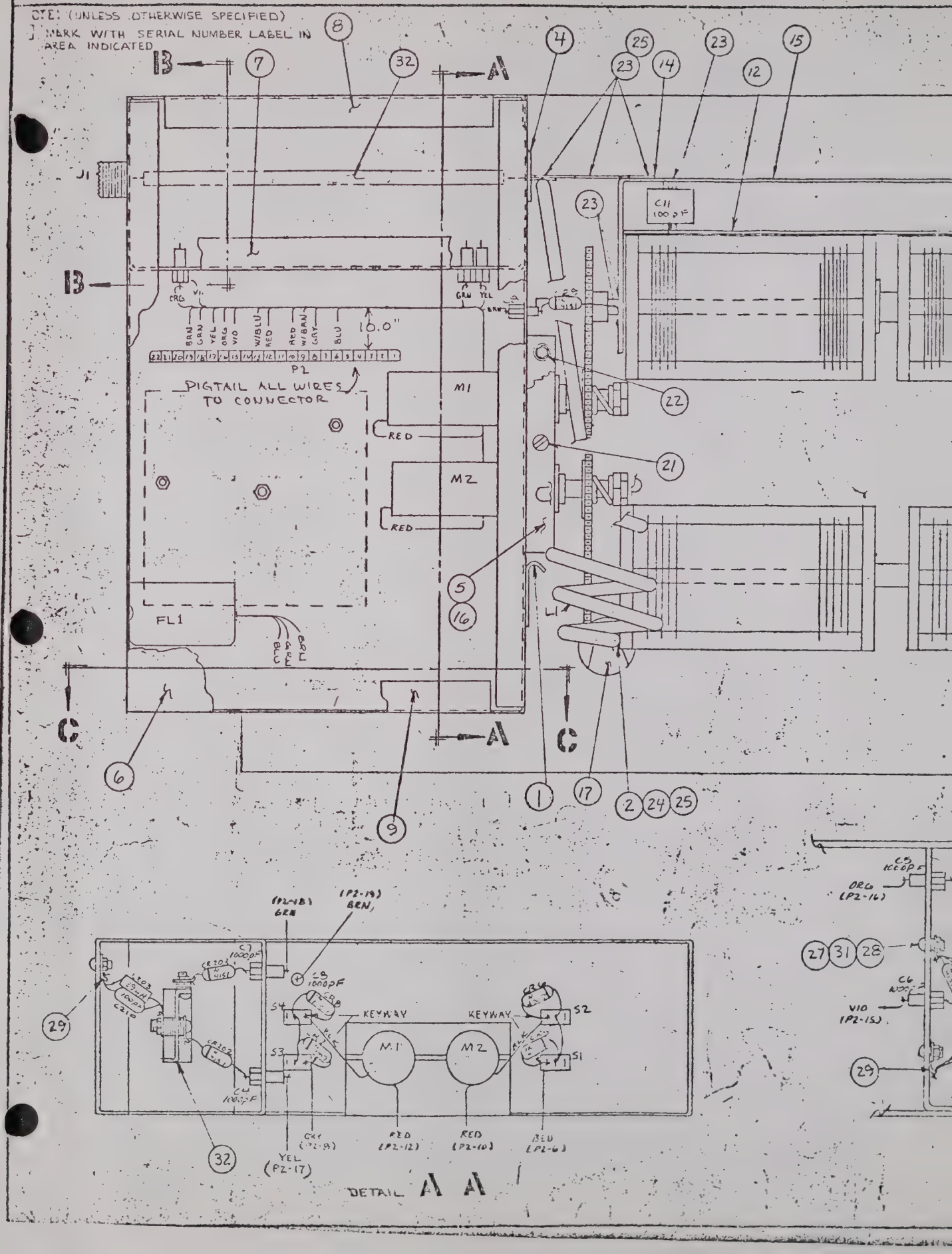

OTE: (UNLESS OTHERWISE SPECIFIED)
] MARK WITH SERIAL NUMBER LABEL IN AREA INDICATED
B
A
C
J1
C11 100 pF
ORG
V1
GRN
YEL
BRN
GRN
YEL
ORG
VIO
W/BLU
RED
RED
W/BRN
GRY
BLU
10.0"
P2
PIGTAIL ALL WIRES TO CONNECTOR
M1
M2
RED
FL1
L1
(P2-18) GRN
(P2-19) BRN
C7 1000pF
C8 1000pF
C4 1000pF
S4
S3
S2
S1
KEYWAY
KEYWAY
M1
M2
RED (P2-12)
RED (P2-10)
BLU (P2-6)
YEL (P2-17)
C5 1000pF
ORG (P2-16)
C6
VIO (P2-15)
DETAIL A A

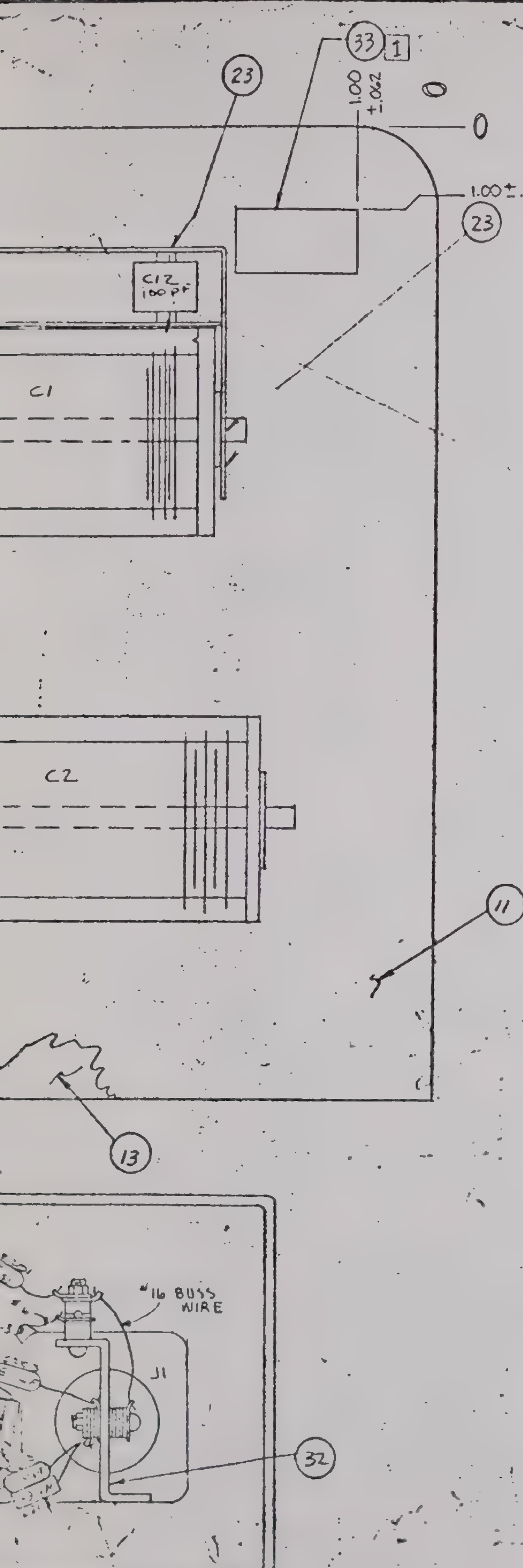

DETAIL B B

LTR	DESCRIPTION		DATE	APPROVED
2	REMOTE PCB2D			
A	RELEASED EO# 1175			
B	EO # 12174 RFE			
C	EO 450 DELETE 'CAMP' FROM FL RC			
D	[illegible]			
E	ITEM 33 ADDED			

WIRE CHART				
COLOR	START	BREAK OUT	END	NOTE
RED	P1-D		C 14	BELDEN 8442
BLK	P1-E		C 13	
RED	M1		P2-12	
RED	M2		P2-10	
BLK	M1		S 4	
BLK	M2		S2	
BLU	S1		P2-6	
GRY	S3		P2-8	
GRN	C7		P2-18	
YEL	C4		P2-17	
BRN	C8		P2-19	
BLK	T1-4		C 13	
RED	T1-5		C 14	
VIO	C6		P2-15	
ORG	C5		P2-16	
W/BLU	E1		P2-13	
W/BRN	E2		P2-9	
	E5	E5	GND-LUG	JUMPER

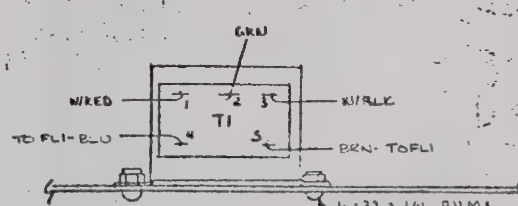

T1 MT'G DETAIL

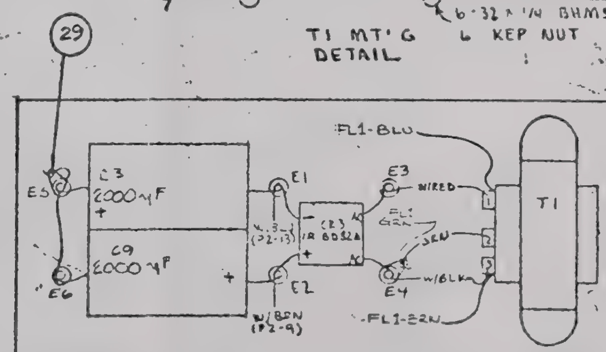

DETAIL C C

SEE SEPARATE EPL-A

07694	
PART 1-10	

A10371	
A10370	
A10372	
A07693	
NEXT ASSY	

2

1 ALL WIRES 22 AWG. UNLESS OTHERWISE SPECIFIED

TOLERANCES UNLESS OTHERWISE SPECIFIED
FRACTIONS DEC ANGLES
± ± ±

APPROVALS | DATE

AUTOMATCH ASSY
PM 702-A

SCALE | SIZE D | DRAWING NO. 07694 | REV E

DO NOT SCALE DRAWING

1 OF 4

BRANSON/IPC
a SmithKline company

BRANSON INTERNATIONAL PLASMA CORPORATION

INSTRUCTION MANUAL

for

R. F. GENERATOR PM 119 .

A03145 Rev C
2/1/78

31172 Huntwood Avenue
P.O. Box 4136, Hayward, CA 94544
(415) 489-3030 Telex: 337-759

INSTRUCTION MANUAL

for

PM 119

Table of Contents

	page
1.0 INTRODUCTION	1
1.1 General Description	1
1.2 Specifications	1
1.3 Equipment Supplied	3
2.0 INSTALLATION	3
2.1 Unpacking and Handling	3
2.2 Installation	3
3.0 OPERATION	3
3.1 Controls and Indicators	3
3.2 Operation	5
4.0 THEORY OF OPERAION	6
4.1 Functional Description	6
4.2 Circuit Description	6
4.2.1 Power Amplifier	7
4.2.2 Coupler	8
4.2.3 Oscillator	8
4.2.4 Regulator	9
4.2.5 Vacuum Circuit	10
4.2.6 Vacuum Trigger	11
4.2.7 5 Torr Detector	11
4.2.8 Power Supply	11
5.0 MAINENTANCE	
5.1 Packaging	12
5.2 Preventive Maintenance	13
5.3 Alignment	13
5.4 Calibration	15
5.4.1 Power Meter	15
5.4.2 Torrmeter	16
5.4.3 Vacuum Trigger	17
5.4.4 5 Torr Detector	17

1.0 INTRODUCTION

1.1 General Description:

The PM119 RF Generator provides the necessary radio frequency power to generate a plasma in either the 8000 series or 2000 series plasma systems. It includes circuits which measure characteristics of the plasma in the reaction chamber, with provisions to drive meters remotely located in the system controller.

The metered quanitities are the RF (radio frenquency) power level transmitted to the chamber; the reflected power, indicating any impedance mismatch between the chamber impedance and 50 ohms; and the pressure of the gas in the chamber.

The output power level is continously controlled over the full 500 watt range by a remote knob. The output level is regulated to withstand normal line voltage variations about 117 volts at either 50 or 60 hertz.

The frequency of the output is crystal controlled at 13.56 Megahertz. The output is designed to drive a 50 ohm load.

The PM119 also includes provisions for initiating the process cycle in an 8000 series controller. It detects that the reaction chamber has been evacuated to a pre-set level (aproximately 0.2 torr) and transmits a signal to the controller which then begins the process cycle.

1.2 Specifications:

Output Frequency.....	13.56 Mhz ±0.005%, crystal controlled
Output Power.....	0-500 watts with continous control
Output.....	Designed for 50 ohm load
Output Connector.....	Type UHF
Power Monitor.....	Output DC current is provided to drive an external meter which is calibrated to a full scale

1.2 (con't)

Power Monitor (con't).....reading of 500 watts. Two seperate outputs give the power transmitted to or reflected from the load.

Vacuum Monitor.....A calibrated DC current is provided to drive a remote meter which is scaled from 0.1 to 20 with a shaded region to indicate atmospheric pressure. The signal drive to the meter is brought in from outside the PM119, being generated by a vacuum transducer in the treatment console.

Power Control.....A remote rotary control knob continously varies power from zero to maximum. A remote toggle switch may switch the RF output on or off. A front panel AC line switch turns power of the PM119 on or off.

WARNING! WHEN OPERATING THE AC POWER SWITCH FROM ON TO OFF, THE OUTPUT POWER MUST BE AT A MINIMUM. EITHER THE LEVEL CONTROL MUST BE AT A MINIMUM SETTING, OR THE RF ON/OFF SWITCH MUST BE OFF.

Rear Panel Connections.....A permanently attached three-wire power cord is provided at the rear panel. A rear connector provides A.C. Power, metering signals, interlock wires, and control wires to the system programmer. A second connector provides power to and receives the signal from the vacuum transducer. A third connector provides RF output.

Power Requirements.....117 volt nominal AC, 50-60 Hz, 15 Amp, maximum. Requires normal three-wire input with ground, neutral and 117 volt leads.

Dimensions.....Width 21 inches
.....Height 11 inches
.....Depth 16.5 inches

Weight.....75 lbs.

1.3 Equipment Supplied:

The following equipment is supplied with the PM119 Control Console:

1 RF Power Output Cable IPC# 01163-001
1 Programmer Cable IPC# 02351-001
1 Vacuum Transducer Cable IPC# 02492-001

2.0 INSTALLATION:

2.1 Unpacking and Handling:

The IPC PM119 Control Consoles are thoroughly tested and inspected and then carefully packed before shipment. The unit should be unpacked with the care due any precision instrument. If the package shows that it has been dropped or handled roughly, return it to the carrier unopened.

Remove the packing carton, being careful not to scar or damage the unit. Make a complete visual inspection of the equipment, checking for damage or missing components. Check that all switches and controls operate mechanically. Report any damage immediately to your IPC representative.

2.2 Installation:

No special installation instructions are required for the PM119 other than those required if special peripheral equipment is required. Mount it as close as possible to the RF power load and leave clear space at the back of the instrument to allow air flow. The PM119 is attached to the RF load with the supplied RF power output cable. If the PM119 is used in a standard IPC Plasma Generation System, Vacuum Transducer and Programmer cables may be used directly. Their connections will be explained in the manual for the system. Connections to other equipment must be taken up as special cases. Information must be obtained from a IPC representative or from reference to the schematic.

BE SURE TO REMOVE SHORTING WIRES ON METERS IN GENERATOR BEFORE OPERATION!

3.0 OPERATION:

3.1 Controls and Indicators:

The operating controls and indicators of the PM119 are located on the front panel. The connectors are

3.1 (con't)

on the rear panel. In the text, all operating controls are called out as they appear on the equipment. Front panel controls and rear panel connectors are described in the following table:

Front Panel Controls and Indicators

AC POWER ON/OFF Switch.....Applies AC power to the PM119

WARNING! WHEN OPERATING THE AC POWER SWITCH FROM ON TO OFF, THE OUTPUT POWER MUST BE AT A MINIMUM. EITHER THE REMOTE LEVEL CONTROL MUST BE AT A MINIMUM SETTING, OR THE REMOTE RF ON/OFF SWITCH MUST BE OFF.

AC POWER Indicator.....The lamp above the AC POWER switch lights when the AC POWER is ON.

READY Indicator.....The lamp lights when RF power is available. Approximately 3 minutes after the AC POWER has been turned on.

Rear Panel Connectors

AC Power Cord.....A permanently attached three-wire cord through which the PM119 obtains its line power.

VACUUM TRANSDUCER..... Allows the vacuum transducer which drives the vacuum meter to be attached to the PM119. It supplies power to the transducer and couples the return signal to the meter.
Connector

PROGRAMMER Plug.....This connects the PM119 to the remote controls which normally determine the PM119 output. 117 VAC is sent to the remote unit. A control line to an external potentiometer determines the PM119 output power level. Three sets of meter leads drive an external vacuum meter and forward and reflected power meter. A power interlock lead may be used to interrupt R.F. power from the PM119. An output denoting a preset vacuum level is provided.

3.1 (con't)

RF POWER OUTPUT.....Connects PM119 output power to
Connector the load via UHF type connector.

3.2 Operation:

Instructions in this section apply to operation of the PM119 independently as a source of RF power. Operation in complete IPC Plasma Systems is described in the manual which applies to that particular machine. Sufficient instructions are included here to operate the PM119 as a power source to supply energy into a 50 ohm matched load.

Since power from the PM119 is controlled via the Programmer cable, either appropriate auxiliary equipment must be provided which includes the RF control or a special control must be constructed. This may be simply a 100K, 2W potentiometer connected to pins L, J, and K of the PROGRAMMER jack. Fasten the wiper to pin J and the end of the pot contacted by the wiper in full clockwise rotation to pin K.

Operating Procedure

1. Attach the RF power output cable to the power output connector on the rear panel of the PM119 and couple the 50 ohm load to the other end of the cable.

2. When the PM119 is used in a complete IPC plasma system, the Programmer cable and Vacuum Transducer cables are installed. As it is here being used separately, install the special RF control discussed above. No RF power can be obtained without some connection to the Programmer jack.

3. Set the AC and RF POWER switches to OFF, the RF POWER LEVEL control full counterclockwise, and the FWD/REFL switch to FWD.

4. Plug the three-wire power cord into the appropriate power outlet socket.

5. Allow the PM119 to warm up 3 minutes with the AC POWER switch ON before operating any other controls. If the PM 119 is used in a complete IPC PLASMA machine evacuate the Reaction Chamber to a pressure of 2 torr.

6. After the unit is warmed up, the READY indicator will kight. Turn the RF POWER switch to ON.

7. Raise the RF LEVEL control until RF output is obtained If the PM 119 is used in an IPC PLASMA System, the power may be read on the wattmeter provided in the system. If it is used separately, an external inline

3.2 (con't)

7. (con't) wattmeter must be provided between generator and load.

8. Rotate the RF POWER LEVEL control clockwise until the wattmeter reading moves up the scale.

9. With the wattmeter reading about 50 watts, change the FWD/REFL switch to REFL. With a matched 50 ohm load, this reading should be very small. If it is large, more than 10-15 watts, then the load must be matched to bring the reflected power down. If the PM119 is used in a standard IPC Plasma System further instructions on matching will be contained in the manual for that system. If not, other means must be used to bring the load to a matched condition.

10. When the load is matched, the power may be raised to any value up to maximum. Return the FWD/REFL control until the wattmeter reads the desired power output.

11. Check the reflected power by switching the FWD/REFL switch to REFL, to be sure that the load remains matched. Reflected power should be less than 2.0% of the forward power. Power must be reduced <u>if the match</u> is not maintained.

WARNING: WHEN OPERATING THE AC POWER SWITCH FROM ON TO OFF, THE OUTPUT POWER MUST BE AT A MINIMUM. EITHER THE LEVEL CONTROL MUST BE AT A MINIMUM SETTING, OR THE RF ON/OFF SWITCH MUST BE OFF.

4.0 <u>THEORY OF OPERATION</u>

4.1 <u>Functional Description</u>:

A functional block diagtam of the PM119 is shown in Fig.1. The OSCILLATOR, POWER AMPLIFIER, COUPLER and REGULATOR constitute a feedback control system regulating the output power at a level determined by the RF level control located on the front panel of the PM119 Generator. The OSCILLATOR generates a 13.56 mhz sine wave which is amplified by the POWER AMPLIFIER. The amplitude of the OSCILLATOR'S output is controlled by the REGULATOR. The COUPLER detects the power supplied by the POWER AMPLIFIER and outputs a dc signal proportional to the power. This dc signal is fed to the REGULATOR where it is compared with the setting of the remote power level setting.

The POWER AMPLIFIER is designed to drive a resistive fifty ohm load, and the reactor center input circuitry is designed to present a fifty ohm load to the generator. This

4.1 (continued)

constitutes a "matched' modular system. In order to provide the appropriate fifty ohm impedance each Reactor Center includes a "matching network" which transforms the impedance of the plasma chamber to fifty ohms. This network must be adjusted to accomodate each set of operating parameters of the Reactor Chamber, e.g; power, pressure, gas. The adjustment of the matching network may be either manual or automatic, depending upon the option provided in the Reactor Center. However, during the time that the matching network is being adjusted, a mismatched condition exists which is a potential hazard to the output stage of the POWER AMPLIFIER. To prevent possible damage to the generator, the COUPLER detects the degree of "mismatch" and provides a DC signal proportional to the mismatch. This signal is referred to as "reflected power", and is fed to the REGULATOR. If the reflected power exceeds a preset limit, the REGULATOR automatically limits the output power to a level that is safe.

The VACUUM CIRCUIT provides the power required by the vacuum sensor in the Reactor Center, and provides the appropriate interface between the sensor and the vacuum display or mater. The VACUUM TRIGGER detects a preset vacuum level and transmits a signal to the Reactor Center (8000 Series). The 5 torr detector circuit disables RF when a pressure greater than 5 torr is detected in the Reaction Chamber. Operating the system at greater pressure may result in damage to the Reactor Center "matching network". The power supply generates the DC voltages required by the system.

4.2 Circuit Description: Refer to Schematic D03035

4.2.1 Power Amplifier:

The power amplifier utilizes a single vacuum tube tetrode V1, which is connected in a common cathode configuration. Capacitors C6 and C7 with inductors L1 and L2 constitute a two section filter to attenuate the RF to the high voltage power supply. Capacitors C14, C15, and C16 provide AC ground to the screen grid of the power tube. C17 is an RF bypass for the filament. An RF voltage is fed to the control grid from the oscillator, and the resulting amplified plate signal is coupled to a pi matching network through C13. The RF signal and the superimposed DC bias fed to the grid of the power amplifier bear the proper relationship and the amplitude to drive the amplifier class C

The pi matching network transforms the load impedance

4.2.1 (con't)

normally fifty ohms, to a higher impedance appropriate for the plate circuit of the tetrode. It is composed of capacitors C9, 10, 11, 12, 18, and 19 with inductor L3. The output of the pi filter is shunted by inductor L4, which serves as a bleeder and filter to power supply ripple frequencies. The variable inductor L3 is the means for adjusting or tuning the plate circuit to the oscillator frequency, while variable capacitor C12 provides means for adjusting the efficiency of the power amplifier class C stage.

Variable capacitor C17 is a neutralizing capacitor, and feeds back a small fraction of the RF plate voltage to the oscillator output circuitry. There it is added out of phase with the oscillator signal to effect the neutralization.

Resistor R112 is a voltage dropping resistor for the screen, and voltage across it serves as a measure of the screen current. Fuse F1 limits the screen current to a safe value. The fuse is readily accessible on the front panel.\

4.2.2 Coupler

The RF Coupler receives the signal from the power amplifier, and with minimal loss couples it to the output cable. It also generates dc signals representative of the power coupled to the output and of the impedance mismatch between the actual load and the desired 50 ohms. These two dc signals are fed to the regulator.

4.2.3 Oscillator

The oscillator is a single stage tuned plate-tuned grid vacuum tube oscillator. The frequency controlling element is a 13.56 mhz crystal, X301 in the grid circuit. R301 provides a dc path for the control grid current, as the grid bias is class C. The plate tuned circuit is comprised of inductor/transformer L303 and capacitors C305, C306m and C307. Variable capacitor C306 provides the means for adjusting the frequency of the plate circuit to crystal frequency. L303 also serves as an autotransformer which transforms the impedance of the power amplifier grid circuit to a higher impedance appropriate for the plate of the oscillator tube. Also L303 with resistors R304 and R305 complete the path for neutralizing the power amplifier tube. R310 and C311 comprise an

4.2.3 (con't)

attenuator and phase shift network completing the feedback loop for the oscillator. C308 provides ac ground for the plate circuit. R302 with bypass capacitor C301 provide a means for monitoring the oscillator tube current at TB2-1 through an isolation resistor R303. The 450 volt plate supply is fed to the plate through L302. L302 and C312 filter the RF to the supply.

The amplitude of the OSCILLATOR output is determined by the positive dc voltage on the screen grid of the oscillator tube. This control voltage is supplied to the OSCILLATOR at terminal E303 by the REGULATOR. A resistive load and voltage supply for the REGULATOR output is provided by the resistor divider R309, R306, R307, R308, and R6. The resistor string is connected between +250 volts at the top and -250 volts at the bottom. The divider also offsets the dc voltage provided by the REGULATOR to bias the control grid of the POWER AMPLIFIER. Transistor Q301 buffers the bias voltage and supplies it to the POWER AMPLIFIER through a filter, L304 and C309, and through L303. Diode CR301 prevents the bias voltage from going too far in the positive direction thereby protecting the POWER AMPLIFIER tube. Capacitors C302 and C303 provide RF bypassing for the screen grid of the OSCILLATOR.

4.2.4 Regulator

The REGULATOR performs two functions. It monitors the power level through the coupler and controls its level according to the setting of the remote RF LEVEL control. It also monitors the "reflected power" from the COUPLER, and if it exceeds a preset level the REGULATOR automatically limits the drive to the POWER AMPLIFIER to a safe level.

Referring again to the schematic, the power level controller consists of operational amplifier A201, buffer transistor Q201, and associated circuitry. The dc signal from the COUPLER is fed through LC filter L201 and C201. This filtered voltage drives the wattmeter through R203. Rheostat R2 serves to calibrate the meter for "forward power". R205 provides a load for the coupler output in the absence of a meter.

The dc gain of the control loop is provided in two parts: The integrated amplifier A201 which

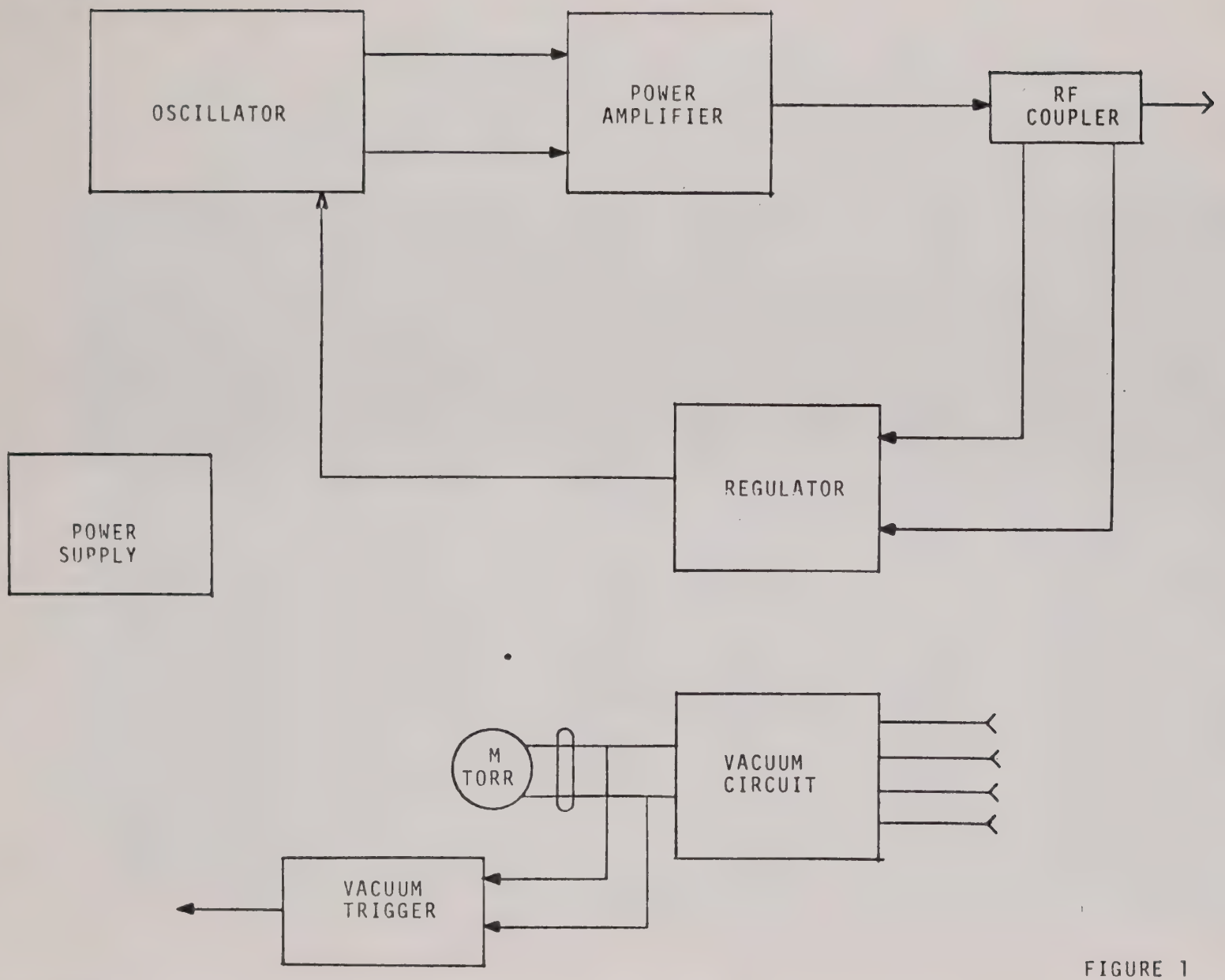
OSCILLATOR
POWER AMPLIFIER
RF COUPLER
REGULATOR
POWER SUPPLY
M TORR
VACUUM CIRCUIT
VACUUM TRIGGER

FIGURE 1

4.2.4 (con't)

has a gain in the order of 10^6: and the amplifier comprised of transistor Q201 and resistors R211 and R213, with a gain of 22. The entire amplifier is made an integrator with feedback capacitor C207 and input resistors R201, R220, R217 and R1. The reference voltage for the amplifier is signal ground through R207. Operationally the regulator output provides a positive voltage to the oscillator grid causing an RF signal through the coupler such that the positive polarity "forward power" signal exactly balances the negative voltage set up by the remote RF LEVEL control.

Capacitors C203, C211 and C209 insure dynamic stability for the feedback amplifier. The output of the integrated amplifier is prevented from going more negative than -5 volts by a clamping network comprised of CR204, CR201, and R209.

The amplifier comprised of integrated amplifier A201 and Q202, with their associated circuitry, perform the identical function as described above, except that it deals with the "reflected power" from the coupler. Its output is combined with the output of the forward power amplifier so that either can limit the RF power output.

If the magnitude of the "reflected power, a positive voltage, exceeds the magnitude of the negative voltage, set by R218, the amplifier shuts down the oscillator by decreasing the oscillator screen voltage.

4.2.5 Vacuum Circuit

The vacuum transducer, which is located in the reactor center remote to the generator, is a thermocouple type. It requires a power source to power its heaters and a meter to display the voltage of its thermocouple. The power source is located in the generator, while the meter is located in the system programmer.

The transducer power source is the vacuum circuit oscillator comprised of integrated circuit amplifier A401 and surrounding components. R401, R402, R403, C402, and C403. The oscillator generates a square wave at approximately one kilohertz. The amplitude of the square wave is adjusted with R4 and coupled to the transducer through transformer T401. The transducers thermocouple is then applied to the remote meter.

4.2.6 Vacuum Trigger

Some plasma system controllers, e.g. 8000 series, require the detection of a preset vacuum level. In the PM 119 this level is preset by R5. The signal is detected by the DC amplifier comprised of integrated circuit amplifier A401, transistor Q401, and their associated circuitry.

The voltage of the transducer thermocouple is applied to one input terminal of the amplifier and the voltage determined by R5 to the other. If the voltage of the thermocouple exceeds the potentiometer voltage, indicating that the chamber pressure is below the preset level, transistor Q401 is turned off. The voltage divider of the R10 and R407 with the +250 volt supply provide the appropriate drive for the relay located in the reactor controller.

4.2.7 5 Torr Detector Circuit

If the PM 119 is used with a complete IPC PLASMA machine, the 5 torr detector circuit inhibits RF when Reactor Chamber pressure is greater than 5 torr. Otherwise excessively high voltages occur in the Reactor Center "matching network" which could damage the network. The vacuum level signal is detected by the DC amplifier comprised of the integrated circuit amplifier A402, transistor Q402, and their associated circuitry. The voltage of the vacuum transducer thermocouple is applied to one input terminal of the amplifier, and the voltage determined by R414 to the other. If the voltage of the thermocouple is less than the potentiometer voltage, Q402 is turned ON. The screen grid of V101, the oscillator tube, is then shunted to ground and RF is inhibited.

4.2.8 Power Supply

The power source for the PM 119 is nominally 117 volts at 50-60 Hz. Referring to the schematic, S1 switches the input power and also provides overload protection. DS1 is the lamp indicating that power is being applied to the unit. B1 is the blower which provides positive air cooling. Transformer T1 provides all the necessary AC voltages utilized in the power supply. Winding S2 drives the filament of the power amplifier tube directly, and winding S4 drives the filament of the oscillator tube. Winding S1 provides the high voltage AC for the power amplifier plate supply. Its output is received by the diode

4.2.8 (continued)

bridge made up of the 20 diodes (five per leg) CR105-CR124. Capacitor C5 is a filter reducing the 100-120 Hz. ripple, and resistors R117-R121 provide a bleeder path for the supply. Winding S3 of T1 provides the AC voltage for generation of all other DC supplies. The negative 250 volt supply is developed by the full wave rectifier/filter comprised of CR126, CR125, and C2. R116 is a bleeder path for the supply. Similarly the positive 250 volt supply is developed by the full wave rectifier/filter comprised of CR102, CR104, and C1. R115 is the bleeder resistor.

The positive 450 volt supply is generated by a voltage doubler arrangement wherein the 250 volt supply is supplemented by a rectifier/filter CR103, C103, CR101, and C104. The bleeder resistor is R114. The two 12 volt supplies consist of zener diodes CR1 and CR2 with resistors R7 and R8. The positive 250 volts is applied to the system through the contacts of time delay relay K1, providing approximately three minutes for the filaments of the power tube to heat before it is called upon to deliver RF. DS1 is a front panel lamp indicating that the warm-up time is over. R13 is a current limiting resistor for the lamp. The output of the plus 250 volt supply is also fused by F1 to prevent overheating of the power amplifier screen grid. If the fuse chould open, it also removes the 250 volts from the screen grid of the oscillator and thereby turns off the oscillator.

5.0 MAINTENANCE

5.1 Packaging

The PM 119 is partitioned into three parts as follows:

1) A lower partition, which becomes accessible upon removal of the bottom cover.
2) A front partition, which becomes accessible upon removal of the hood and front portion of the top cover.
3) A rear partition, which becomes accessible upon removal of the hood and rear portion of the top cover.

All those adjustable components involved in alignment of the generator are included in the lower partition. Each adjustable component is accessible through an access hole in the front or rear panel, or by removing the bottom cover. The lower partition includes two circuit boards. The first contains the circuitry of the RF OSCILLATOR and is bolted directly to the chassis. All of the oscillator parts, except the vacuum tube, are mounted on the

5.1 (con't)

bottom side of the circuit board. The vacuum tube is accessible by removing the top rear cover.

The second circuit board is a plug-in board which houses the circuitry of the REGULATOR, the VACUUM CIRCUIT, and the VACUUM TRIGGER. Adjustments on this circuit board include the FORWARD POWER LIMIT and the REFLECTED POWER LIMIT. They are accesable through an access hole in the rear panel.

The front partition houses the several power resistors, R7, R8, R10, R11, and R12; the power supply filter capacitors C1 and C2; and the front panel parts.

The rear partition includes the circuitry for the RF POWER AMPLIFIER and the voltage supplies. The rectifier diodes with filter capacitors C103 and C104 are packaged on a circuit board which is mounted on top of the power supply transformer T1.

All connectors for mating with other system components are located on the rear panel.

For precise location of parts refer to drawing D03100.

5.2 Preventive Maintenance

The most obvious requirement for preventive maintenance is cleansing the air filters mounted on the rear panel. They are aluminum mesh and can be cleaned with ordinary solvents. If they are not cleaned , restricted air flow could result in damage to the power amplifier tube. The cooling fan requires no lubrication.

5.3 Alignment

As stated previously, all adjustable components are accesible through the front and rear panels, or by removing the bottom partition, it is most convenient to set the generator on the side nearest the ac power ON/OFF switch.

As discussed in Section 3.2, the PM119 is controlled via the PROGRAMMER cable. Consequently, the controls necessary to perform the following adjustments must be provided in the manner indicated in Section 3.2. The PM119 may either be installed in a system, such as an IPC 2000 series system, which includes the necessary control circuits, or a special control must be provided.

5.3 (con't)

Make certain the AC power switch is OFF and the AC power cord disconnected. Remove the botton cover.

Disconnect the 6 volt filament drive [orange wire) by disconnecting the insulated slip-connector in the 6 volt line adjacent to the oscillator board.

Make the following initial adjustments:

1) Bias level (R6) - Mid position.
2) Oscillator tuning capacitor (C306) - Mid position.
3) Plate tuning Capacitor (C12) - Mid position.
4) Plate coil (L3) - fully out, then in three complete turns.
5) Forward limit (R217) - Full counter clockwise.
6) Reflected limit (R218) - Full Counter clockwise.
7) Neutralizing capacitor (C17) - Fully out, then in two full turns.

Turn the RF POWER LEVEL control to its minimum (fully counter clockwise) position.

Set the RF POWER ON/OFF switch to its OFF position.

Plug in the A.C. Power cord.

Turn the A.C. power switch on.

Wait approximately three minutes at which time the READY light will turn on.

Set the R.F. POWER ON/OFF switch to its ON position.

Observe the output of the generator at the RF connector with an oscilloscope. If an oscilloscope is not available, a detector and dc meter may be used.

Observe the voltage on TB2-1 and slowly turn the RF LEVEL control clockwise for a voltage of 4.0 to 5.0 volts. (level control will be sensitive since the circuit is operating open loop without feedback from the RF coupler).

Adjust the oscillator plate tuning capacitor, C306, for a minimum voltage on TB2-1.

Connect a dc voltmeter, e.g. Simpson 260, from TB2-2 to ground. The voltage to be measured here represents the power amplifier plate current, and will be about 0.4 volts.

Connect a dc voltmeter from TB2-1 to ground. The voltage to be measured here represents the oscillator tube cathode current, and will be about 4.6 volts.

Observing the output of the generator, adjust the neutralizing capacitor C17 for a voltage null at the output.
Return the POWER LEVEL control to its minimum position.
Turn OFF the RF ON/OFF switch.

5.3 (con't)

Turn OFF the A.C. POWER switch.

Reconnect the filament lead slip-connector.

If the system wattmeter has not been calibrated, insert an in line wattmeter, e.g. a Thruline Model 43 wattmeter from Bird Electronic Corporation with a 500 watt plug, between the generator RF output connector and a 50 ohm dummy load. The dummy load should be rated for a continous drive of 1000 watts.

Put the A.C. POWER switch to its ON position. After the READY light comes on, turn on the RF ON/OFF switch. Adjust the POWER LEVEL-- control for about 150 watts at the output. Observe the voltage at TB2-2, and adjust L3 for a minimum.

Increase the setting of the POWER LEVEL control for an output power level of 500 watts.

Observe the voltage on TB2-2. Adjust L3 for a minimum and note the minimum value. Adjust C12 so that the minimum value is negative 0.4 volts.

Observe the voltage on TB2-1. Adjust C306 for a null and note the null value. Adjust R6 for a of 4.6 volts.

5.4 Calibration (Do not perform calibration unless 5.3 has been done).

5.4.1 Power Meter

Calibration of the system power meter requires a reference meter, e.g. the Thruline Model 43, and a 50 ohm load. If a dummy 50 ohm load is not available, it is feasable to use a reactor center properly matched. An IPC reactor center with AutoMatch would suffice. Using a clip lead, ground J3 pin 8 of the regulator printed circuit board. Insert the reference meter between the generator and the dummy load. Place the FWD/REFL switch in its FWD position, the RF LEVEL OFF and the AC POWER ON. Adjust the mechanical zero of the front panel power meter to read zero (0).

Turn the FWD LIMIT (located on the plug in the circuit board) potentiometer to its extreme counterclockwise position. With the POWER LEVEL control completely counterclockwise turn the POWER LEVEL switch ON.

5.4.1 (con't)

Slowly advance the POWER LEVEL control to extreme clockwise position. The output power should remain at zero. Adjust the FWD LIMIT potentiometer until the reference meter reads 500 watts.

Turn the POWER LEVEL control counterclockwise until the reference meter reads 500 watts. Adjust R2, FWD CAL, so that the front panel meter also reads 500 watts.

Adjust the RF LEVEL control for zero (0) watts and turn the RF OFF. Disconnect the RF cable from the generator output connector. Turn the REFL LIMIT potentiometer to its extreme counterclockwise position.

Turn the RF LEVEL ON, and turn the LEVEL control slowly to its maximum clockwise position. The RF output should remain at zero (0). Adjust the REFL LIMIT potentiometer until the meter reads 50 watts. Put the FWD/REFL switch to its REFL position. Adjust the REFL CAL potentiometer until the meter reads 50 watts on the "reflected power" scale. Remove the clip lead from J3 pin 8.

5.4.2 Torrmeter

The torrmeter adjustment is one which must be made in conjunction with the vacuum transducer which is to be used with the torrmeter. The transducer is normally located remotely in a unit external to the generator. In addition to the system transducer, another reference transducer/meter combination is needed on the same vacuum system. There also must be a means for adjusting the vacuum in the system.

If these conditions can be met, set the system pressure (utilizing air) to 0.2 torr according to the reference torrmeter/transducer. Adjust the VAC CAL potentiometer so that the front panel meter also reads 0.2 torr. Adjust the mechanical adjustment on the front panel meter so that it also reads 2.0 torr. Repeat the process until no further adjustments are necessary.

5.4.3 Vacuum Trigger

To set the VAC level, set the system pressure to 0.2 torr and observe the voltage at pin 7 of J3. J3 is the printed circuit board connector. The voltage will be either zero (0) volts or approximately +125 volts. Set the VAC TRIG adjustment so that this voltage just changes from its zero to its positive level. Allow the system pressure to rise above 0.5 torr (or until the voltage returns to its zero level). Reduce the pressure and verify that the voltage returns to its positive level at 0.2 torr. Reajust VAC TRIG as necessary.

5.4.4 5 Torr Detector

To set the 5 torr level, set the system pressure to 5.0 torr and observe A402 pin 12 of the regulator PC board. The voltage will be either +12VDC or -12VDC. Adjust R414 until the voltage just switches to +12VDC. Reduce the pressure and verify that the voltage switches to -12VDC.

ENGINEERING PARTS LIST 0

REF. NO.	DESCRIPTION	PART NO.	QTY.
1	OSCILLATOR BOARD	C 03039	1
2	FIBER WASHERS		2
	#6 x 1/16" THICK		
3	SOCKET TUBE, 9 PIN	2110-0254	1
	(SAE #5-9388)		
4	CRYSTAL SOCKET	2110-0254	1
	AUGAT 8000 D-61		
C303, 308	CAPACITOR CERAMIC DISK 1 KV .01 μF	1500-0003	2
	SPRAGUE #5GA-S10		
C302, C304 C310	CAPACITOR CERAMIC DISK 1 KV .001 μF	1500-0032	3
	SPRAGUE #5GA-D10		
C309	CAPACITOR MICA 39 pf	1500-0051	1
C301	CAPACITOR CERAMIC DISK 1KV 2200 pf	1500-0212	1
	SPRAGUE #5GA-D22		
C307	CAPACITOR CERAMIC DISK 1KV 47 pf	1500-0217	1
	SPRAGUE #5GA-Q47		
C311	CAPACITOR, DIPPED MICA 500V 200 pf	1500-0223	1
	ARCO/ELMENCO #CM05FD201J03		
C306	CAPACITOR AIR VARIABLE 2-18 pf	1550-0010	1
	E.F. JOHNSON #160-110		
L304	CHOKE 39 mH	1800-0012	1
	MILLER #9210-56		
L302	R.F. CHOKE 100 uH	800-0253	1
	MILLER #4632		

INTERNATIONAL PLASMA CORPORATION
31159 SAN BENITO
HAYWARD, CALIF.
94544

TITLE: PM 118-119
OSCILLATOR BOARD

SIZE	DWG. NO.	REV.	CHK.	APPR.
C	03041	H	[illegible]	[illegible]

DRAWN	DATE	SHEET 2 OF 3
	7-3-79	

A 04289 REV B

ENGINEERING PARTS LIST 0

REF. NO.	DESCRIPTION	PART NO.	QTY.
X 301	CRYSTAL 13.56 MHZ	2300-0111	1
E 301-306 E 305, 309	TERMINAL	2860-2008	8
	H.H. SMITH 2008		
R 303	RESISTOR CARBON COMP. 1K ¼W	4702-0102	1
R 301	" " " " " " 100K ¼W	4702-0104	1
R 307	" " " " " " 75K 1W	4704-0753	1
R 310	" " " " " " 1K 2W	4705-0102	1
R 302	" " " " " " 150Ω 2W	4705-0151	1
R 308	" " " " " " 200K 2W	4705-0204	1
R 304-305	" " " " " " 2.2K 2W	4705-0222	2
R 306	" " " " " " 39K 2W	4705-0393	1
R 309	RESISTOR 20K 5W	4706-0203	1
	OHMITE 466J		
CR 301	DIODE	4800-0013	1
	1N4007		
Q 301	TRANSISTOR	4800-0024	1
	2N5657		
L 303	COIL ¼ of IPC #1800-0007	B 03071	1
	AIRDUX 816 A 12 TURNS		
5	HEAT SINK	B-04485	1
	SCHEMATIC	703035	REF

INTERNATIONAL PLASMA CORPORATION
31159 SAN BENITO
HAYWARD, CALIF.
94544

TITLE: PM 118-119 OSCILLATOR BOARD

SIZE	DWG. NO.	REV.	CHK.	APPR.
C	03041	H	DVGH	

DRAWN | DATE 7-13-78 | SHEET 3 OF 3

A 04289 REV B

DIONEX GAS PLASMA SYSTEMS

ENGINEERING PARTS LIST

DWG. NO.	REV.
D 03100	W

REV	DESCRIPTION		DATE	CHK	APPR
W	P/N #64, #65, #66 ADDED...EO 831		2268		
V	E.O.#729 DELETE ITEM 18-60 M.C.		1/16/85		
U	722-12925-01 AND 728-12917-01 ADDED / EO 637 & 634		1238		
T	REVISED E.O.# 592 FCC LABEL 11/2/84	H.E.	11/15/84		
S	REVISED E.O. #11803 5/4/83	KG	5/4/83		
R	REVISED E.O. #11719 4/30/83	KG	5/3/83		
P	REVISED E.O. #11662	SO	10-82		
N	E.O. #11206 & #11259	AK	10-81		
M	E.O.#11153	AS	7-27-81		
L	EO#10935, 10942, 10916	M.S.	12-4-80	1-15-81	
K	E.O. 10852		9/80		PGD
J	E.O. #10655, 10870	MS	4-1-80		
I	E.O. 10705	PB	3/80		

REVISION LEVEL

DIONEX GAS PLASMA DIVISION

31159 SAN BENITO
HAYWARD, CALIF. 94544

DRAWN	DATE	TITLE	
CHECKED	DATE	PM 119 R. F. GENERATOR TOP ASSEMBLY	
ENG.	DATE	D	DRAWING NO. 03100 REV W
		DO NOT SCALE THIS DRAWING	

03100 NEXT ASSY.

A05495 REV A

ENGINEERING PARTS LIST

REF. NO.	DESCRIPTION	PART NO.	QTY.
T1	POWER TRANSFORMER	C 02933	1
1	TOP COVER REAR	C 02940	1
28	REAR PANEL	C 02942	1
2	POWER TUBE SUPPORT BRACKET	C 02943	1
3	RF TUNING BAFFLE & FAN SUPPORT BRACKET	D 02944	1
4	WINDOW BRACKET	C 02945	1
5	TEFLON INSULATOR GENERATOR	B 02946	1
6	SIDE COVER, RIGHT	C 02948	1
7	MAIN CHASSIS	D 02949	1
8	CHASSIS FRONT PANEL	C 02950	1
9	RFI SHIELD	C 02951	1
10	COIL SUPPORT BAR (FIXED)	C 02952	1
11	COIL SUPPORT BAR (LOWER)	B 02953	1
12	ADJ POT MOUNTING BRACKET	B 02954	1
13	REGULATOR BD MOUNTING BRACKET	B 02955	1
14	BOTTOM COVER	C 02956	1
15	RF GENERATOR SCREEN BRACKET	B 02959	2
29	FRONT PANEL DECAL	C 02960	1
REF	SCHEMATIC	D 03035	1
A3	OSCILLATOR BD ASSEMBLY	C 03041	1
A1	HIGH VOLTAGE BD ASSEMBLY	C 03053	1
31	REAR PANEL SCREENS	B 03056	2
16	RF GENERATOR SKIDS	B 03057	3
17	BEZEL BAR	B 03058	2
REF	HARNESS	C 03059	1

BRANSON/IPC

31172 HUNTWOOD AVE
HAYWARD, CALIFORNIA
94544

TITLE
PM 119 RF GENERATOR
TOP ASSEMBLY

SIZE	DWG. NO.	REV	CHK.	APPR
D	03100	W		

DRAWN	DATE	SHEET	OF
JV	8-18-78	3	7

ENGINEERING PARTS LIST

REF. NO.	DESCRIPTION	PART NO.	QTY.
L3	INDUCTOR, AIR VARIABLE	C 03063	1
19	FLEXIBLE RF STRAP	B 03077	1
20	NEUTRALIZING CAPACITOR BRACKET	B 03078	1
21	FRONT PANEL BRACKET LEFT	B 03081	1
25	PLATE CAPACITOR BRACKET	B 03082	1
22	RF OUTPUT PLATE	B 03083	1
23	SAFETY SHIELD AC POWER STRIP	B 03084	1
24	OUTPUT COIL ADJUSTMENT SCREW	B 03085	1
26	OUTPUT COIL TIE STRAP	B 03111	1
REF	INSTRUCTION MANUAL	A 03144	1
A4	RF COUPLER ASSEMBLY	C 03260	1
27	POWER SWITCH SUPPORT BRACKET	B 03325	1
59	REGULATOR BD SUPPORT BRACKET	B 03374	1
32	NEUTRALIZING CAPACITOR: STRAP	B 04302	1
36	LOWER COIL SUPPORT SPACER	B 04535	1
34	TOP COVER FRONT	C 04604	1
30	BEZEL DECAL	C 04606	1
35	LEFT SIDE COVER	D 04607	1
33	FRONT PANEL BRACKET RIGHT SIDE	B 04608	1
58	L3 TO OUTPUT PLATE STRAP	B 04610	1
A2	REGULATOR BD ASSEMBLY	C 06513	1
	SPEC, TEST, PM 119 RF GENERATOR	722-12923-01	REF
	SPEC, PROD, PM 119 RF GENERATOR	728-12917-01	REF

BRANSON/IPC

31172 HUNTWOOD AVE
HAYWARD, CALIFORNIA
94544

TITLE: PM 119 RF GENERATOR
TOP ASSEMBLY

SIZE	DWG NO	REV.	CHK	APPR
D	03100	A		

DRAWN	DATE	SHEET
JV	8-18-78	SHEET 4 OF 7

A04289 REV B

ENGINEERING PARTS LIST

REF. NO.	DESCRIPTION	PART NO.	QTY.
C20, 21	CERAMIC DISC .01 μF 500V SPRAGUE 5GAS-SiO	1500-0001	2
C1, 2	CAPACITOR 480 μF 450V MALLORY CGS 481-450 DFI	1500-0037	2
C22, 14-16	CAPACITOR 1000pF 500V ARCO/ELMENCO DM 1gFD102 13	1500-0116	4
C5	CAPACITOR 4 μF 3000V ARCO/ELMENCO DM 15-ED101 J03	1500-0177	1
C9,10,11,18 19	CERAMIC TUBULAR CAPACITOR CENTRALAB 8505-100N	1500-0189	5
C6, 7, 13	CERAMIC TUBULAR CAPACITOR, 1000pF 5KV	1500-0191	3
	CENTRAL 85-5-50Z		
C8, 23	CERAMIC TUBULAR CAPACITOR 50pF 7.5KV	1500-0192	2
	CENTRAL 8585-1000		
57	CAPACITOR MT'G RINGS 2" ID	1525-0002	2
C12	AIR VARIABLE CAPACITOR, EF JOHNSON 154-0003-001	1550-0247	1
L1, 5	CHOKE RF 10μH MILLER 4612	1800-0006	2
L2	COIL AIR DUX 1212A	1800-0100	1
L4	CHOKE RF 100μH MILLER 4632	1800-0253	1
J3	EDGE CONNECTOR VECTOR R6rr P.C. SOCKET	2100-0223	1
37	8 PIN SOCKET CINCH 8AM	2110-0170	1
38	POWER TUBE SOCKET EIMAC SK800B	2110-0200	1
61	TUBE CHIMNEY EIMAC SK-806	2110-0201	1
39	QUICK DISCONNECT,FEMALE HOLINGSWORTH SO-5075	2120-5075	3
40	QUICK DISCONNECT MALE HOLLINGSWORTH SO-5076	2120-5076	3
J1	9 PIN (F) PANEL CONNECTOR AMPH. MS 3102 A-22-195	2152-2216	1
J2	4 PIN (M) PANEL CONNECTOR AMPH. MS 3102 A-145-25	2152-2417	1

BRANSON/IPC

31172 HUNTWOOD AVE
HAYWARD, CALIFORNIA
94544

TITLE

PM 119 RF GENERATOR
TOP ASSEMBLY

SIZE	DWG. NO.	REV.	CHK	APPR.
D	03100	W		

DRAWN	DATE	SHEET
JV	8-18-89	5 OF 7

ENGINEERING PARTS LIST

REF. NO.	DESCRIPTION	PART NO.	QTY.
41	INSULATED STANDOFF USECO 1417-9	2160-0207	5
TB1	BARRIER STRIP CINCH 10-142	2170-0193	1
42	MARKER STRIP CINCH MS 10-142	2170-0222	1
43	CONNECTOR UHF F-F AMPH 29500	2180-0002	2
44	CONNECTOR DBL MALE UHF DOWKEY F3-125	2180-0024	2 (H)
45	CONNECTOR UHF BULKHEAD AMPH 83-798	2180-0190	1
46	CONNECTOR ELBOW 90° AMPH 83-1AP	2180-0218	1
47	PWR CABLE CLAMP ELECTROLINE L51-2 SCREW CLAMP	2190-0001	1
B1	FAN, COOLING 148VK-282	2600-0190	1
48	FURNITURE LEVELER FRANKIN SILENT GLIDE 6242	2800-0005	6
TB2	TERMINAL STRIP CINCH JONES 54C	2860-0866	1
D51,2	LAMP AMBER 115V DIALCO 507-4537-1433	3900-0001	2
52	LAMP SOCKET DIALCO 515-0074	3900-0005	2
50	LAMP CLIP DIALCO 515-0051 SPEED CLIP	3900-0006	2
51	LAMP WASHER ELDEMA Q145-008	3900-0007	2
K1	TIME DELAY RELAY 120V POTTER BRUMFIELD CHB 38-7003	4500-0159	1

BRANSON/IPC

31172 HUNTWOOD AVE
HAYWARD, CALIFORNIA
94544

TITLE: PM 119 RF GENERATOR
TOP ASSEMBLY

SIZE	DWG. NO.	REV	CHK.	APPR
D	03100	W		

DRAWN	DATE	SHEET
JV	8-18-78	6 OF 7

ENGINEERING PARTS LIST

REF. NO.	DESCRIPTION	PART NO.	QTY.
R11	RESISTOR 10K 12W OHMITE 3826	4712-0103	1
R12	RESISTOR 500Ω 12W OHMITE 1730	4712-0501	1
R7, 8	RESISTOR 5K 25W OHMITE 0212	4725-0502	2
R6	POTENTIOMETER 100K 2W OHMITE CMU 1041	4750-0001	1
R2, 3, 5	POTENTIOMETER 750Ω 2W ALLEN BRADLEY JAIL04055751UC	4750-0002	3
R4	POTENTIOMETER 2.5K 2W OHMITE CLU 2521	4750-0968	1
56	RESISTOR CLIPS OHMITE 55S	4760-0001	2
CR1,2	DIODE ZENER FAIRCHILD IN4742A 12V 1W	4800-0053	2
S1	POWER SEITCH POTTER BRUMFIELD 112-220-101	5100-0148	1
64	LABEL, H.V. WARNING	09836	4
53	FUSE CLIP LITTLEFUSE 129002	5150-2210	1
A3	RCA, OSCILLATOR TUBE 12JT6A	5700-0014	1
V1	POWER TUBE EIMAC 4CX1500BY763	5700-0187	1
65	LABEL, RFI WARNING	11010	4
55	POWER CORD 14 AWG BELDEN 176295	6000-0020	1
66	LABEL, PATENT	6100-0011	1
	LABELS	6100-0004	1
62	LABEL, BRANSON	6100-0014	1
63	LABEL, BRANSON	6100-0015	1
	LABEL, FCC CERTIFICATION	780-12898-01	1

BRANSON/IPC

31172 HUNTWOOD AVE
HAYWARD, CALIFORNIA
94544

TITLE: PM 119 RF GENERATOR
TOP ASSEMBLY

SIZE	DWG. NO.	REV.	CHK.	APPR
D	03100	W		

DRAWN	DATE	SHEET 7 OF 7
JV	8-18-78	

ENGINEERING PARTS LIST

REF. NO.	DESCRIPTION	PART NO.	QTY.
1	HIGH VOLTAGE BOARD	C 03053-1	1
C 104	CAPACITOR 100 mfd 350 V DC	1500-0214	1
	SPRAGUE 39D-107F350HS4		
C 103	CAPACITOR 20 mfd 450 V DC	1500-0215	1
	SPRAGUE 39D-206F450GL4		
E101-103,	TERMINAL	2860-2008	7
106-108, E111	H.H. SMITH #2008B		
R 114-116	RESISTOR CARBON 100K 2W	4705-0104	3
R 117-121	" " " " 200 K 2W	4705-0204	5
R 113	" " " " 1.2 5W	4708-0010	1
	SPRAGUE #243E1R05		
CR 10-126	DIODE	4800-0003	26
	MOTOROLA #MR 510		

INTERNATIONAL PLASMA CORPORATION
31159 SAN BENITO
HAYWARD, CALIF.
94544

TITLE HIGH VOLTAGE BOARD ASSY
PM 18-117

SIZE	DWG. NO.	REV.	CHK.	APPD.
C	03053	B		

DRAWN	DATE	SHEET 2 OF 2
SE	7-13-73	

A 04289 REV B

ENGINEERING PARTS LIST

O

REF. NO.	DESCRIPTION	PART NO.	QTY.
1	RF COUPLER COVER	B 03257	1
2	RF COUPLER BODY	B 03258	1
3	RF COUPLER CONDUCTOR	B 03259	1
4	NYLON SPACER, .250 THK.	2860-4008	2
	H.H. SMITH #4008		
5	NYLON BHMS	2860-6328	2
	#6-32 x ½"		
C1, C2	CAPACITOR, 1000 MF FEED THRU	1500-0207	2
	ERIE #327-000-X5U0-102M		
J1, J2	UHF CONNECTOR	2180-0190	2
	AMPH #83-798		
R2	RESISTOR, 110 ohm 1 W C.C.	4704-0111	1
R1	POTENTIOMETER	4750-0002	1
	750 ohm A&B TYPE J		
CR1, CR2	DIODE #IN4151	4800-0045	2
6	NYLON #8 WASHER		6
7	#6 SOLDER LUG		2
8	#10 SOLDER LUG		4
9	#318 SOLDER LUG		1
10	#12 GA BUSS WIRE		A/R
11	#18 GA BUSS WIRE		A/R

INTERNATIONAL PLASMA CORPORATION
31159 SAN BENITO
HAYWARD, CALIF.
94544

TITLE: R F COUPLER ASS'Y

SIZE	DWG. NO.	REV.	CHK.	APPR.
C	03260	D	A. Rocha 8-4-78	

DRAWN	DATE	SHEET 2 OF 2
	7-12-78	

DIONEX GAS PLASMA SYSTEMS

ENGINEERING PARTS LIST

DWG. NO.	REV.
C 06513	C

REV	DESCRIPTION		DATE	CHK	APPR
C	E.O.#11550	A.L	5-82		
B	E. O. #11300	AK	11/81		
A.	E.O. # 10852	AR	3/80		

REVISION LEVEL

DIONEX GAS PLASMA DIVISION

31159 SAN BENITO
HAYWARD, CALIF. 94544

DRAWN	DATE	TITLE
A.R.	3/27/80	REGULATOR & VACUUM BOARD ASSEMBLY PM 118-119 RF GENERATOR
CHECKED	DATE	
ENG.	DATE	

	DRAWING NO.	REV.
C	06513	C

DO NOT SCALE THIS DRAWING

NEXT ASSY.

A05495 REV A

ENGINEERING PARTS LIST

REF. NO.	DESCRIPTION	PART NO.	QTY.
C 406	CAPACITOR, CERAMIC DISC .01 μF 500 V.	1500-0001	1
	SPRAGUE 5GAS-510		
C214,C405, C409-411	CAPACITOR, 22 μF, 16 V.	1500-0011	5
	ITT TAG 20/22.0/16-10		
C404,407	CAPACITOR, CERAMIC DISK .1μF 25 V.	1500-0026	2
	CENTRALAB UK20-104		
C205,206 C213 C401,408	CAPACITOR, CERAMIC DISK .001 μF 1000 V	1500-0032	5
	SPRAGUE 5GA-D10		
C201,202 C211,212	CAPACITOR, MICA, 100 pF	1500-0117	4
	ARCO/ELMENCO DM 15- ED 101J03		
C402,403	CAPACITOR, .05 μF 500 V.	1500-0210	2
	SPRAGUE 5HK-550		
C207,208	CAPACITOR, 47 pF 1000 V	1500-0217	2
	SPRAGUE 5GA-Q47		
C203,204 C209,210	CAPACITOR, CERAMIC DISK 10 pF 1000 V	1500-0218	4
	SPRAGUE 5GA-Q10		
C231	CAPACITOR, .1 uF, 50 V.	1500-0249	1
L201,202 L401-404	CHOKE 39 μH	1800-0012	6
	MILLER H9210-56		
1	IC SOCKET 14 PIN	2110-0001	3
W1	JUMPER, GOLD	2120-0401	1
	BERG #65474-101		
4	BERGSTIK, GOLD	2120-0402	1
	BERG #65500-103		
R209,210	RESISTOR, METAL FILM 5.1K 1/4 W.	4602-0053	2

DIONEX
GAS PLASMA DIVISION
31159 SAN BENITO
HAYWARD, CALIF.
94544

TITLE: REGULATOR & VACUUM BOARD ASSEMBLY
PM 118-119 RF GENERATOR

SIZE	DWG. NO.	REV.	CHK.	APPR.
C	06513	C		

DRAWN	DATE	SHEET 2 OF
A.R.	3/27/80	

ENGINEERING PARTS LIST

REF. NO.	DESCRIPTION	PART NO.	QTY.
R 233	RESISTOR, 442K, 1/4 W.	4602-4423	1
R215,216	RESISTOR, CARBON 100Ω 1/4 W.	4702-0101	2
R205,206 R410,413	RESISTOR, CARBON 1K 1/4 W.	4702-0102	4
R211,212 R238, R401,403	RESISTOR, CARBON 10K, 1/4 W.	4702-0103	5
R219	RESISTOR, CARBON, 100K, 1/4 W.	4702-0104	1
R237	RESISTOR, 1M, 1/4 W.	4702-0105	1
R222	RESISTOR, CARBON, 10 MEG 1/4 W.	4702-0106	1
R204	RESISTOR, CARBON, 1.5K, 1/4 W	4702-0152	1
R 402	RESISTOR, CARBON, 22K, 1/4 W.	4702-0223	1
R213,214	RESISTOR, CARBON 220K, 1/4 W.	4702-0224	2
R201,R202 R207,208	RESISTOR, CARBON 27K, 1/4 W.	4702-0273	4
R406,412	RESISTOR, CARBON, 3.3K 1/4 W	4702-0332	2
R404,415	RESISTOR, 390K, 1/4 W	4702-0394	2
R236,240 R405,411,415	RESISTOR, CARBON, 4.7K, 1/4 W	4702-0472	5
R220,221 R234	RESISTOR, CARBON 47K, 1/4 W.	4702-0473	3
R235	RESISTOR, 510K, 1/4 W.	4702-0514	1
R408,409	RESISTOR, CARBON, 680 1/4 W.	4702-0681	2
R203	RESISTOR, CARBON, 6.8K, 1/4 W.	4702-0682	1
R239	RESISTOR, CARBON, 16K, 1/4 W.	4702-0163	1
R218	POTENTIOMETER 50 K	4750-0012	1
	BOURNS 3069P-1-503		
R232	POTENTIOMETER 10 K	4750-0013	1
	BOURNS #3069-1-103		

DIONEX
GAS PLASMA DIVISION
31159 SAN BENITO
HAYWARD, CALIF.
94544

TITLE: REGULATOR & VACUUM BOARD ASSEMBLY
PM 118-119 RF GENERATOR

SIZE	DWG. NO.	REV.	CHK.	APPR.
C	06513	C		

DRAWN	DATE	SHEET 3 OF 4
A.R.	3/27/80	

A 04289 REV

ENGINEERING PARTS LIST

REF. NO.	DESCRIPTION	PART NO.	QTY.
R 414	POTENTIOMETER, 1K	4750-0021	1
	BOURNS 3069P-1-102		
R217	POTENTIOMETER, 100K	4750-0022	1
	BOURNS 3069P-1-104		
A201, A401,402	OPERATIONAL AMPLIFIER	4800-0012	3
	FAIRCHILD MA 747		
Q201,202 Q401,402	TRANSISTOR	4800-0024	4
	MOTOROLA 2N 5657		
CR203,204 CR230,241 CR 417	DIODE	4800-0045	5
	1N4151		
CR201,202	DIODE	4800-0051	2
	ZENER 1N5231		
T401	AUDIO TRANSFORMER	5600-0014	1
	ESSEX TA-45		
2	REGULATOR BOARD BLANK	C 06512	1
3	HEATSINK	B 04485	4
	SCHEMATIC, PM 119	D 03035	REF
	SCHEMATIC, PM 118	D 03034	REF

DIONEX
GAS PLASMA DIVISION
31159 SAN BENITO
HAYWARD, CALIF.
94544

TITLE: REGULATOR & VACUUM BOARD ASSEMBLY
PM 118-119 RF GENERATOR

SIZE	DWG. NO.	REV.	CHK.	APPR.
C	06513	C		

DRAWN	DATE	SHEET 4 OF 4
A.R.	3/27/80	

NOTE: (UNLESS OTHERWISE SPECIFIED)

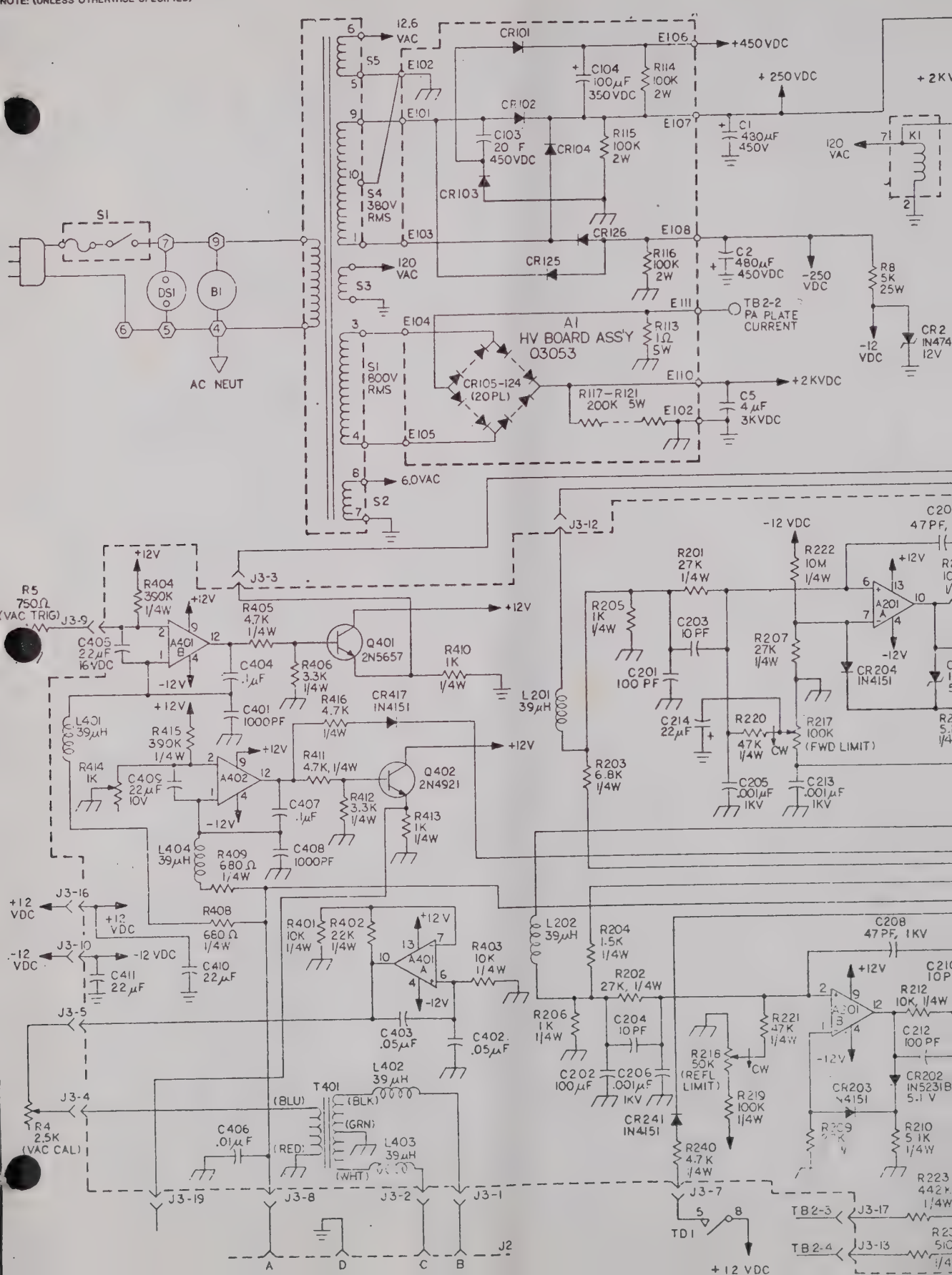

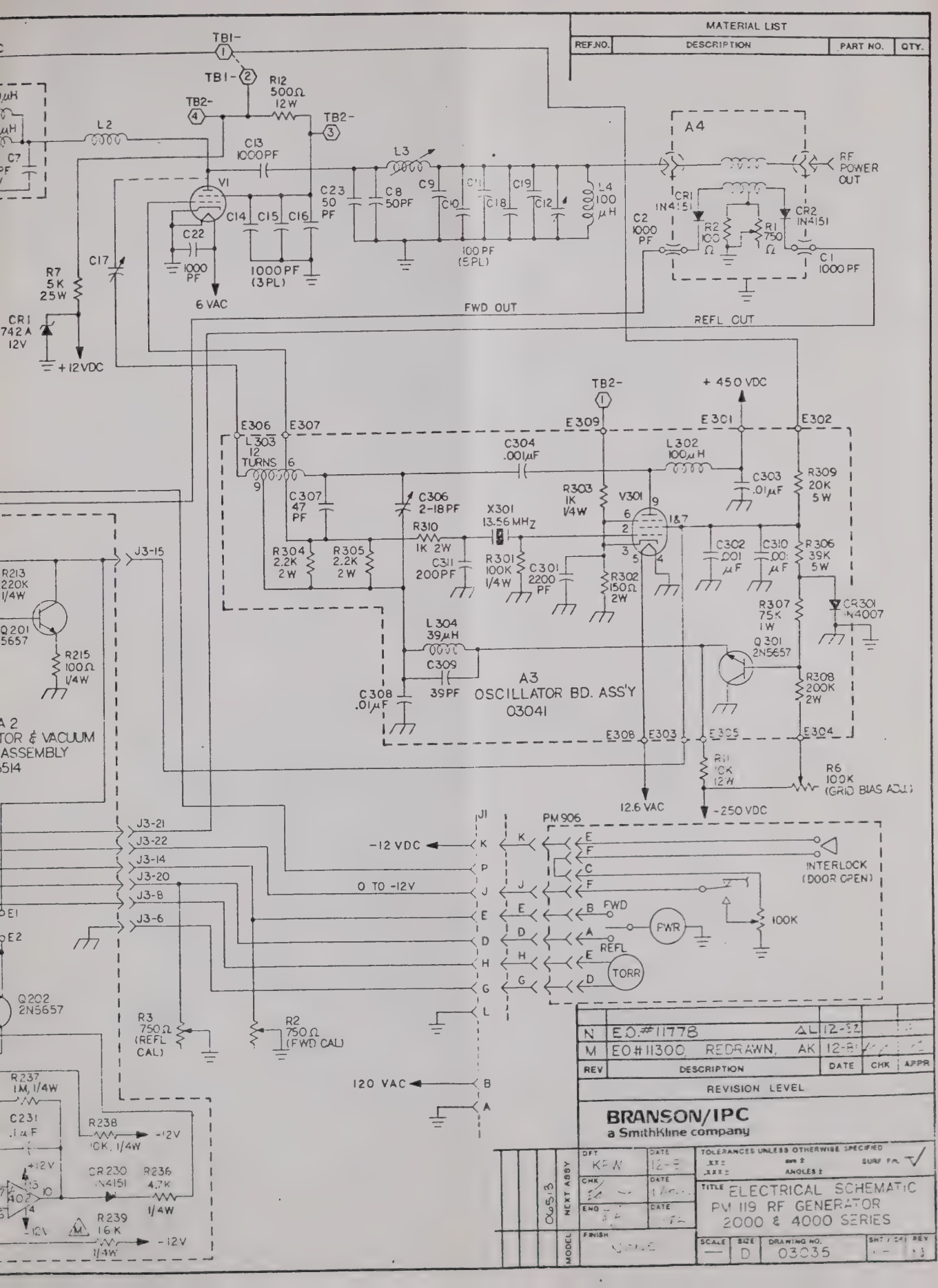
MATERIAL LIST
REF.NO.
DESCRIPTION
PART NO.
QTY.
TB1-
TB2-
R12 500Ω 12W
L2
C13 1000PF
V1
C14
C15
C16
C22 1000 PF
1000PF (3PL)
6 VAC
C23 50 PF
C8 50PF
L3
C9
C10
C11
C18
C19
C12
100 PF (5PL)
L4 100 μH
A4
RF POWER OUT
CR1 1N4151
CR2 1N4151
R2 100 Ω
R1 750 Ω
C2 1000 PF
C1 1000 PF
FWD OUT
REFL OUT
R7 5K 25W
CR1 742A 12V
+12VDC
C17
+ 450 VDC
E306
E307
E309
E301
E302
L303 12 TURNS
C304 .001μF
L302 100μH
C303 .01μF
R309 20K 5W
C307 47 PF
C306 2-18PF
R303 1K 1/4W
V301
X301 13.56MHz
R310 1K 2W
R304 2.2K 2W
R305 2.2K 2W
C311 200PF
R301 100K 1/4W
C301 2200 PF
R302 150Ω 2W
C302 .001 μF
C310 .001 μF
R306 39K 5W
R307 75K 1W
CR301 1N4007
L304 39μH
C309 39PF
C308 .01μF
Q301 2N5657
R308 200K 2W
A3 OSCILLATOR BD. ASS'Y 03041
E308
E303
E305
E304
R11 10K 12W
R6 100K (GRID BIAS ADJ.)
12.6 VAC
-250 VDC
J3-15
R213 220K 1/4W
Q201 5657
R215 100Ω 1/4W
A2 TOR & VACUUM ASSEMBLY 514
J3-21
J3-22
J3-14
J3-20
J3-8
J3-6
E1
E2
Q202 2N5657
R3 750Ω (REFL CAL)
R2 750Ω (FWD CAL)
J1
-12 VDC
0 TO -12V
120 VAC
PM906
INTERLOCK (DOOR OPEN)
FWD
REFL
PWR
TORR
100K
R237 1M, 1/4W
C231 .1μF
R238 10K, 1/4W
-12V
CR230 1N4151
R236 4.7K 1/4W
R239 16K 1/4W
N E.O.#11778 ΔL 12-82
M EO#11300, REDRAWN, AK 12-81
REV DESCRIPTION DATE CHK APPR
REVISION LEVEL
BRANSON/IPC
a SmithKline company
TOLERANCES UNLESS OTHERWISE SPECIFIED
SURF FIN.
TITLE ELECTRICAL SCHEMATIC PM 119 RF GENERATOR 2000 & 4000 SERIES
SCALE
SIZE D
DRAWING NO. 03035
NEXT ASSY
MODEL
FINISH
06513

This document is the confidential property of INTERNATIONAL PLASMA CORPORATION and any use made thereof other than that authorized by said corporation is prohibited

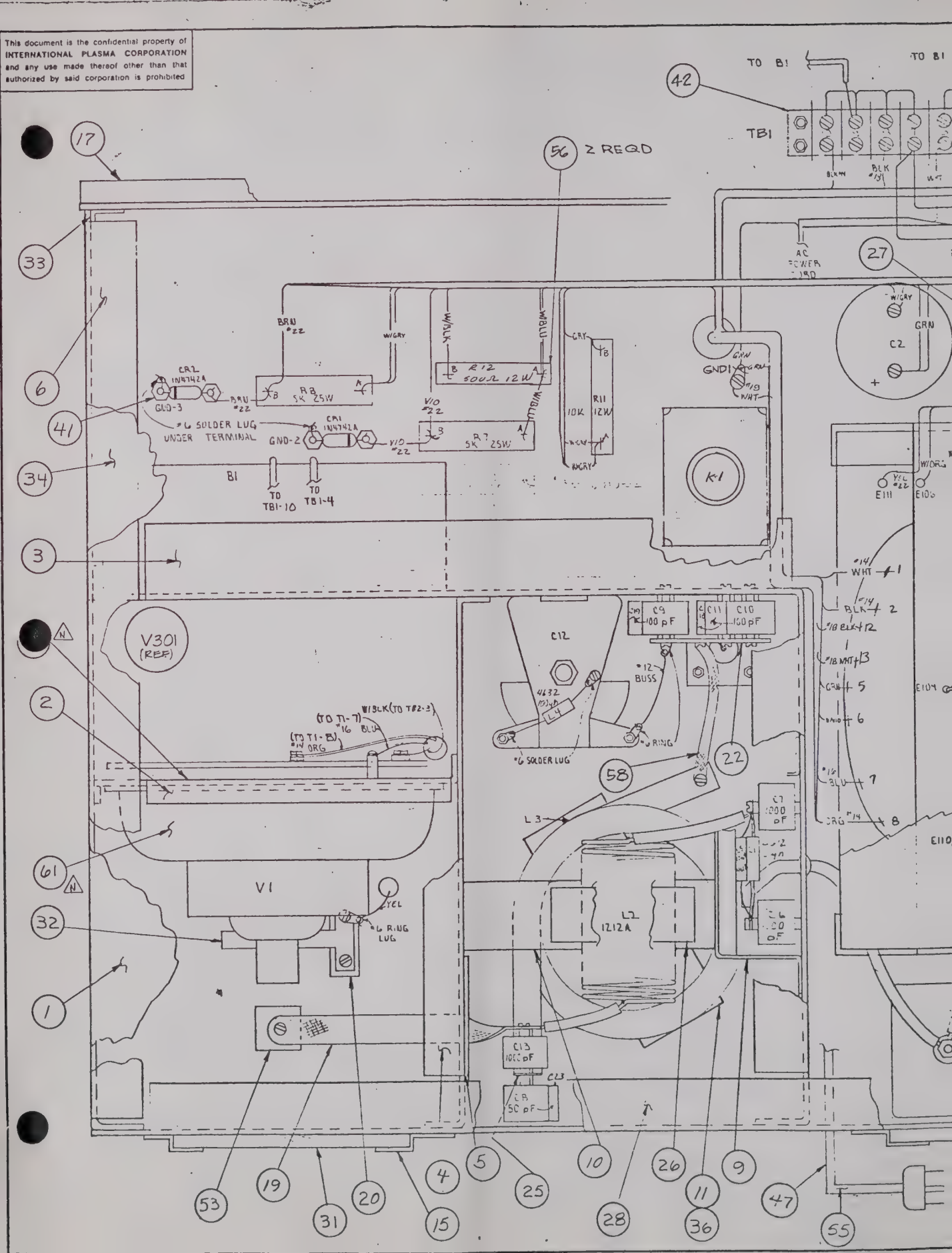

REV	DESCRIPTION	CK	DATE	APPR
R	EO#11719 4/30/83	[illegible]	[illegible]	DH
S	EO#11803 5/4/83	[illegible]	[illegible]	DH
T	EO# 592 11/12/84	[illegible]	[illegible]	[illegible]
U	722-12925-01 AND 728-12917-01 ADDED EO 637 634	[illegible]	[illegible]	[illegible]
V	EO#729 DELETE ITEM 18	[illegible]	[illegible]	[illegible]
W	P/N#64,#65,#66 ADDED EO 631	[illegible]	[illegible]	[illegible]

REV	DESCRIPTION	PREP	DATE	APPR
B	REVISED	[illegible]	5-17-76	
C	EO #10203, 10204, 10206	[illegible]	[illegible]	
D	ADD 219C & CORRECT WIRING	[illegible]	9-30-76	[illegible]
E	[illegible]	[illegible]	[illegible]	[illegible]
F	EO# 103+1	[illegible]	5-3-78	
G	[illegible]	[illegible]	[illegible]	[illegible]
H	EO 10512	KG	3-28-[illegible]	[illegible]
I	E.O. # 10552	AR	3-17-80	
L	E.O. # 10916	M.S.	11-25-80	[illegible]
M	E.O. # [illegible]	LS	7-27-[illegible]	[illegible]
N	EO # 11206 & 11259	AK	11-2-8[illegible]	[illegible]
P	EO# 11662	SP	4-27-83	DH

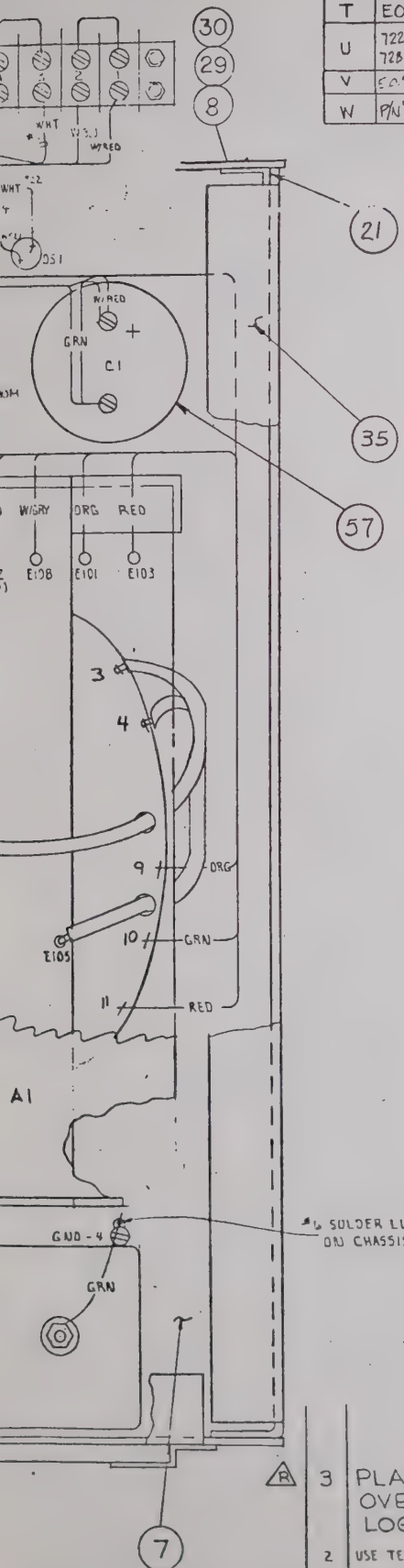

WIRE LIST

COLOR	START	BREAK OUT AT	END	NOTES
BLK	AC POWER CORD		S1-BOTTOM	BELDON 6000-0020
WHT			TB1-6	↓
GRN	AC POWER CORD		GND-1	BELDON 6000-0020
BLK #14	TB1-10		T1-2	
WHT #14	TB1-5		T1-1	
BLK #14	S1-TOP		TB1-7	
BLK #22	DS1		TB1-7	
WHT #22	DS1		TB1-5	
#18 BLK	TB1-8		K1-7	
#18 WHT	TB1-3		K1-2	
FAN	B1		TB1-4	NOT IN HARNESS
FAN	B1		TB1-9	NOT IN HARNESS
BLK #18	T1-12		J1-5	
WHT #18	T1-13		GND	
GRN	J1-L		GND-7	
GRN	T1-5		GND-1	
W/VIO	T1-6		E303	
BLU #16	T1-7		V1-GND	
ORG #14	T1-8		V1-FIL	SLIP ON CONNECTOR IPC #
	T1-3		E104	BELDON 8898
	T1-4		E105	BELDON 8898
ORG	T1-9		E101	
GRN	T1-10	E102, C1(-), C2(+)	GND-1	
RED	T1-11		E103	
	C5		E110	BELDON 8898
	C5		C6	BELDON 8898
GRN	C5		GND-4	NOT IN HARNESS
W/GRY	E108	C2(-), R11-A, R3-A	R6	
W/RED	E107	C1(+), TB1-1	E302	
W/BLK	R12-B	T32-3	V1-SCREEN	
VIO #22	CR1	R7-B, K1-B	J3-16, T	
BRN #22	R8-B	J3-10, L	J1-K	
GRY	R11-B		E305	
	C7		L2	BELDON 8898
	C13		L2	BELDON 8898
BRN	R8-B		CR2	JUMPER
YEL #22	E111		TB2-2	
W/BLU	TB1-2	R12A	TB2-4	
W/BLU	R12-A		R7-A	JUMPER

3 PLACE ITEM 62 & 63 OVER EXISTING LOGO'S

2 USE TEFLON SLEEVING ON ALL JUMPER

1 ALL WIRES ARE 18 GA UNLESS OTHERWISE SPECIFIED

FIND NO		NOTES
PREP	[illegible]	INTERNATIONAL PLASMA CORP. HAYWARD, CALIFORNIA
CHECK	[illegible]	
APPR	[illegible]	TITLE PM 119 TOP ASS'Y AND WIRE LISTS
MATERIAL	—	
FINISH	—	SIZE D DRAWING NO C3100
		SCALE — SHEET 1 OF 7

This document is the confidential property of INTERNATIONAL PLASMA CORPORATION and any use made thereof other than that authorized by said corporation is prohibited.

WIRE LIST				
COLOR	START	BREAK OUT AT	END	NOTES
BLU	J3-4, D		R4	
ORG	R4		J3-5, E	
WHT	J3-9, K		R5	
GRN #18	R3		GND-6	
RED	J3-12, N		A4-FND	
W/BLU	R2	J3-14, R	J1-E	
RED	J3-19, W	JUMPER TO J3-15, S	E303	
W/GRN	R3	J3-20, X	J1-D	
WHT	J3-21, Y		A4-REPL	
W/YEL	J3-22, Z		J1-J	
CLR	J3-8, J		J1-H	BELDON 8762
BLK	J3-6, F		J1-G	↕
SHIELD	GND-7			BELDON 8762
RED	J3-8, J		J2-A	BELDON 8770
BLK	J3-1, A		J2-B	↕
CLR	J3-2, B		J2-C	
GRN	J2-D		GND-8	BELDON 8770
YEL	E304		C17	NOT IN HARNESS
RED	DS2		K1-3	↓ ↓
GRN	DS2		GND-5	NOT IN HARNESS
BLU	E309		TB2-1	
W/BLK	R6		E304	
W/RED	TB2-3		J3-17	
GRN #18	R2		GND-6	
GRN #18	R5		GND-6	
W/VIO	J3-3		J1-P	
WHT	J1-A		GND-7	
	TB1-1		TB1-2	
	TB1-3		TB1-4	
	TB1-4		TB1-5	JUMPER
	TB1-5		TB1-6	
	TB1-7		TB1-8	
	TB1-8		TB1-9	
	TB1-9		TB1-10	
#18 BLISS TEFLON	GND 7		J3-11	
BLK	K1-7		K1-1	
VIO/W	K1-5		J3-7	
BLU/W	TB2-4		J3-13	

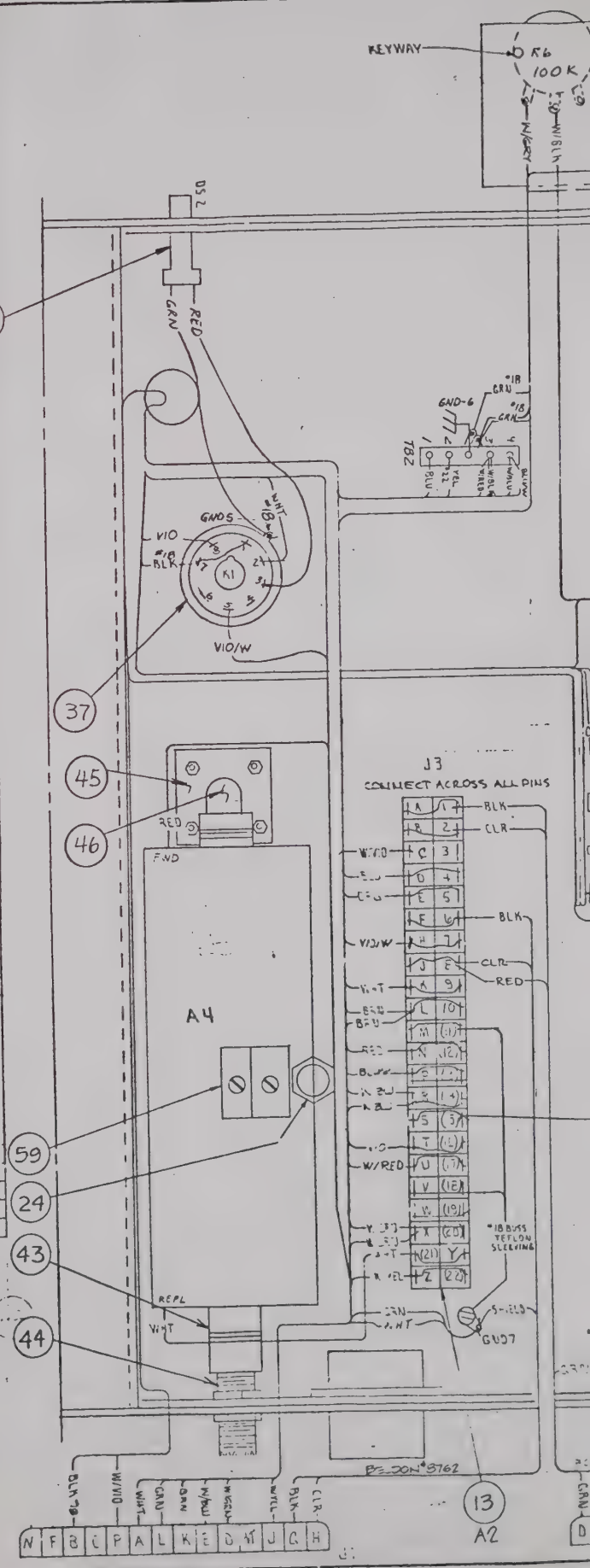

3 INSULATED SLIP ON CONNECTOR IPC # 2120-5075 & 2120-5076
2 MOUNT BACK PANEL PLUGS WITH KEYWAYS IN UP POSITION WHEN MACHINE IS IN OPERATING POSITION
1 ALL WIRES FROM J3 22 GA. UNLESS OTHERWISE SPECIFIED

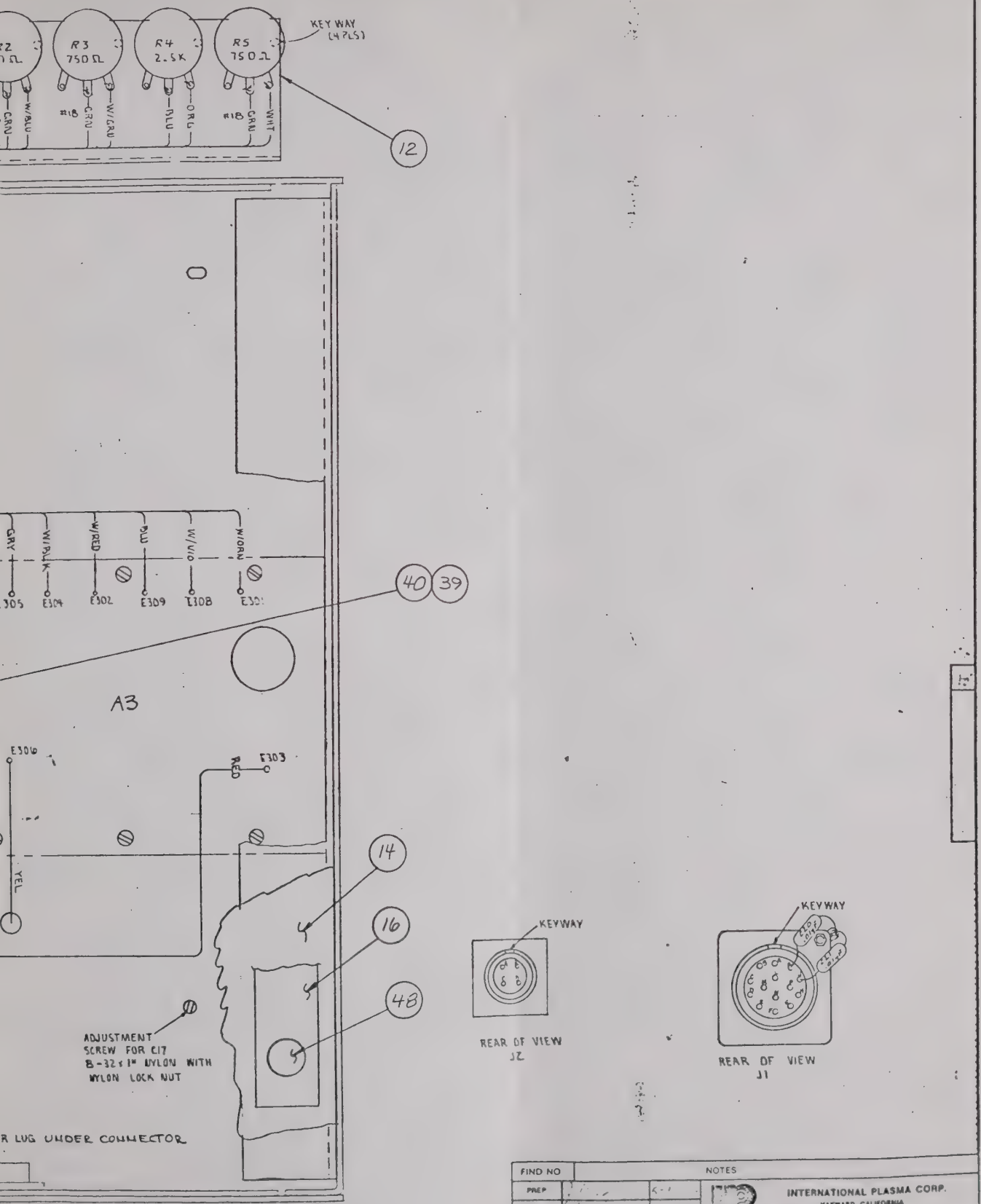

FIND NO	NOTES		
PREP			INTERNATIONAL PLASMA CORP. HAYWARD, CALIFORNIA
CHECK			TITLE: PM 119 TOP ASS'Y AND WIRE LISTS
APPR			
MATERIAL			
FINISH			SIZE D · DRAWING NO 03100 · W
			SCALE · SHEET 2 OF 7

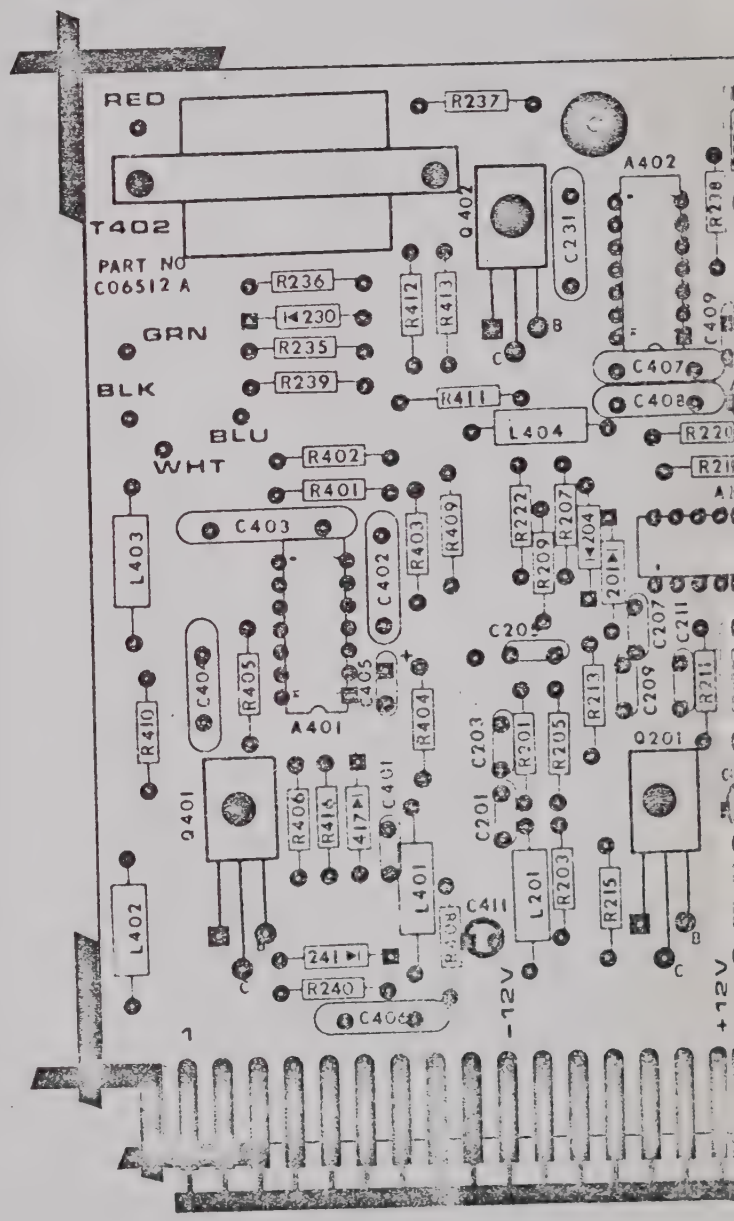
RED
T402
PART NO
C06512 A
GRN
BLK
BLU
WHT
R237
A402
Q402
C231
R236
R235
R239
R412
R413
R411
L404
C407
C408
R402
R401
C403
C402
R403
R409
R222
R207
R209
L403
C404
R405
A401
R404
C205
C207
C211
C209
R213
R211
R410
Q401
R406
R416
C401
C203
R201
R205
Q201
C201
L401
L201
R203
R215
C411
L402
R240
C406
-12V
+12V

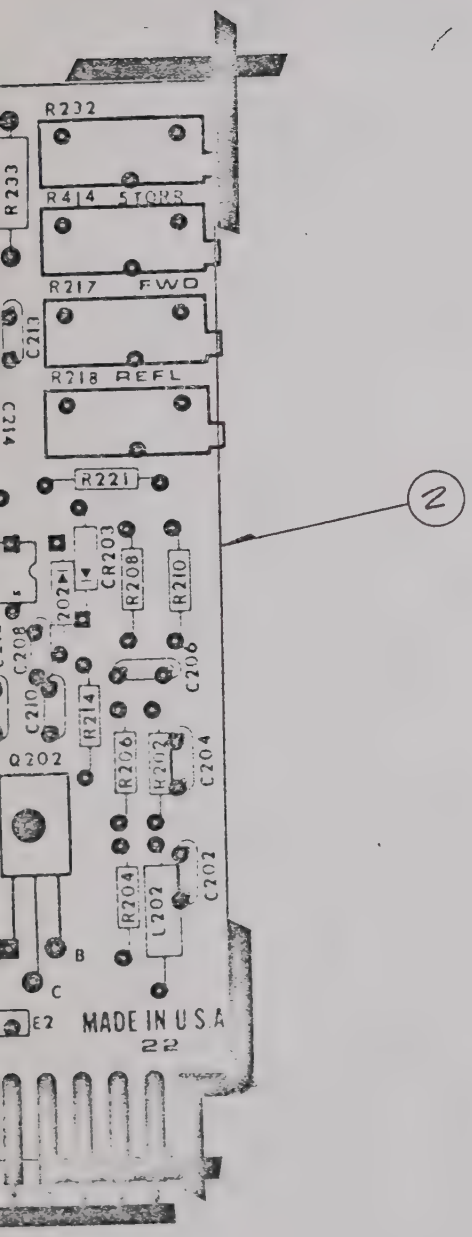

REV	DESCRIPTION	DATE	CHK	APPR
C	EO# 11550	2-82		
B	EO # 11300	11-81		
A	E.O. # 10852	3-80		

REVISION LEVEL

DIONEX GAS PLASMA DIVISION

31159 SAN BENITO
HAYWARD, CALIF. 94544

DRAWN	DATE	TITLE: ASSEMBLY DRAWING REGULATOR, VACUUM BOARD PM 118,119 GENERATOR
CHECKED	DATE	
ENG	DATE	C — DRAWING NO. 06513 — REV C
SCALE 2:1		DO NOT SCALE THIS DRAWING — 1 OF 4

NEXT ASSY

Series 2000T Etcher/Strippers: True Run-to-Run Reproducibility

A Series 2000T etcher/stripper, comprised of a reactor center, process programmer, PM 315 gas mixing module (optional), DPS 2300 end of process detector (optional) and RF generator (not shown).

Purpose

Branson/IPC etcher/strippers are economical, reliable production systems, used in the commercial manufacture of microelectronic components. By employing low-temperature plasmas to promote chemical reactions, they can rapidly and precisely etch all commercial thin-film materials, including silicon, silicon oxide, silicon nitride, tantalum compounds, tungsten, chromium, gold, platinum and molybdenum. And they can strip photoresist from thin-film circuits, silicon wafers, masks and ceramic substrates.

These systems also are used for removing organic contamination from optical surfaces and other sensitive workpieces.

In every application, plasma-processing offers significant cost and performance advantages over earlier etching and stripping methods:

First, plasma-processing is dry and safe. The reagents employed are harmless to handle, and are considerably less expensive than the acids used in wet-chemical processes. In etching, for example, a Branson/IPC machine uses a fluorine plasma generated by the ionization of Freon 14. Freons are fluorine compounds widely used as refrigerants; they can be shipped, stored and handled without danger. For stripping photoresist, the etcher/stripper generates a plasma from ordinary oxygen.

Secondly, a Branson/IPC etcher/stripper provides finer resolution, sharper etching and less undercutting than can be obtained by conventionally acid-etching. Thus it can handle finer patterns and keep closer tolerances.

Thirdly, plasma-processing makes it possible to perform sequential etching and stripping operations in the same machine. This improves processing speed, eliminates costly loading and unloading steps, and dramatically reduces damage to workpieces.

Capabilities

Series 2000T represents a major advance in plasma-etching technology These units provide true reproducibility in the plasma-processing of semiconductor wafers

Branson/IPC will assure all users of Series 2000T systems that run-to-run variation among etched wafers won't exceed 5%.

This extraordinary performance is achieved by making certain that all of the wafers, in all runs, have identical temperatures and identical thermal histories when etching begins. Earlier etcher/strippers weren't able to do this: The starting temperature for each etching run depended on the operating history of the etching reactor, and was affected greatly by the time intervals between runs.

In Series 2000T etcher/strippers, this problem has been eliminated decisively. A pre-heating step—executed by proprietary controls that were developed specifically for these machines—ensures that etching begins at the same selected temperature, in every etching run.

Description

A Branson/IPC etcher/stripper has three functional units: a reactor center, having one or more reactors, made of quartz or aluminum; a radio-frequency (RF) generator that operates from any standard electrical source; and a process programmer. In Series 2000T systems, these three units are housed in three separate modules. The RF generator can be located near the reactor center, or remote from it.

Operation

A Series 2000T etcher/stripper is fully automated. Each system includes a process programmer that stores specified values of process variables for three different plasma processes, and executes these processes sequentially without manual intervention.

A typical processing sequence for etching polycrystalline silicon takes about 20 minutes.

The sequence begins with Series 2000T's unique pre-heating step. A nitrogen plasma uniformly heats the reactor and the wafers to a selected starting temperature. Then the nitrogen plasma automatically is replaced by a plasma of Freon (or other active gas), which etches the wafers for a prescribed period of time. In the third step, the Freon plasma is replaced by an oxidizing plasma that strips all photoresist from the etched wafers.

Controls

Operation of a Series 2000T etcher/stripper is governed by two advanced control modules not found on earlier systems:

- The Model PM-921 Temperature Controller allows the operator to select the temperature at which etching begins. This unit controls the etcher/stripper during the pre-heating step, and automatically terminates this step when the wafers have reached the proper temperature. A digital display on the controller continuously indicates the temperature within the etching chamber during pre-heating, etching and stripping. Both the temperature-selection control and the temperature display are accurate to within 1 degree Centigrade.
- The Model PM-906U Process Programmer is a special programmer designed for use with the PM-921 Temperature Controller.

All Series 2000T etcher/strippers are equipped with the Branson/IPC AutoMatch 2 impedance-matching control, which maximizes the stability, repeatability, and electrical efficiency of etching processes.

Models

Branson/IPC offers several standard etcher/strippers in Series 2000T. They differ in the number, length and diameter of their reactors. Models with 10-inch reactors can process 3-inch or 4-inch wafers; 12-inch reactors are for the new 5- and 6-inch wafers. Some of the more popular systems are:

Model	RF Generator Power, watts	Reactor diameter & length
2005T-10020SCA	500	10″ x 20″
2150T-21020SCA	1500	Two 10″ x 20″
2100T-11220SCA	1000	12″ x 20″

Accessories

High-uniformity etching with a Series 2000T system requires the use of the Branson/IPC Tunnel cylinder. This unit is described in Product Bulletin 7501. Additional Optional Equipment available for Branson/IPC Etcher Strippers is described in Product Bulletin 7503.

Information in this Bulletin is subject to change without notice

BRANSON INTERNATIONAL PLASMA CORPORATION

Gas Plasma Systems
31172 Huntwood Avenue, P.O. Box 4136, Hayward, CA 94544
(415) 489-3030, Telex: 337-759

BRANSON/IPC
a SmithKline company

Copyright 1981 by Branson/IPC

www.manualsplus.com
1019004